Technical Systems Inc.

Corporate Office
2303 196th Street SW
Lynnwood, WA 98036
Tel 425.775.5696
TSIcontrols.com

Control Panel Resubmittal
1.1

Project Name:	**IPID Snow Creek Screen Design**
Customer:	**Washington Dept of Fish & Game**
TSI Project No.:	**7913**
Project Manager:	**Tim Hecox**
Date:	**August 18, 2020**
Prepared By:	**Technical Systems, Inc.** **2303 196th St SW** **Lynnwood, WA 98036** **(425) 775-5696**

TSI Technical Systems Inc.

RESUBMITTAL COMMENTS CONFIRMATION

TSI Submittal No.	TSI Project No.
1.1	7913
Project Name	
IPID Snow Creek Screen Design	
Specification Section(s)	
N/A	
Description	
(SCCP) Screen Cleaning Control Panel	

Item No.	Reviewer's Comments	TSI Response
1	Provide 16-gauge steel, Grey powder coated finish enclosure in lieu of 304 Stainless Steel.	Provided. See BOM item numbers 122H & 139E.
2	The fan only option allows bugs to get in. If they go with a fan only, I wonder if there is a model that would still use these filters. Cotton wood bloom is another issue.	TSI has submitted a fan with an Aluminum filter that is cleanable/reusable. See BOM item numbers 159A, 159B, & 159C

Technical Systems Inc Control Panel BOM			IPID Snow Creek Screen Design Washington Dept of Fish & Game		Customer - Washington Dept of Fish & Game Job Number - 7913
PartID	**Qty**	**Manufacturer Part Number**	**Description**	**Manufacturer**	**Vendor**
			(SCCP) Screen Cleaning Control Panel		
122H	1	SCE-48EL3616LPPL	Wall Mount Enclosure, Mild Steel, NEMA 3R/4/12, Single Door, 48.00" x 36.00" x 16.00"	Saginaw	Saginaw
137E	1	SCE-DF48EL36LP	Enclosure Deadfront Panel, Painted Mild Steel, 44.00"H x 32.63"W	Saginaw	Saginaw
138J	1	SCE-48P36	Enclosure Backpan, Painted Mild Steel, 45.00" x 33.00"	Saginaw	Saginaw
139A	1	SCE-ELMFK4	Enclosure Wall Mount Kit	Saginaw	Saginaw
139E	1	SCE-DS36N4	Drip Shield, Mild Steel, 1.00" H x 36.00" W x 3.00" D	Saginaw	Saginaw
140A	1	ALFSWD	Enclosure Switch, Door Activated	Hoffman	Graybar
142A	1	0595682	LED Lighting Package, Under Cabinet Style, 10-Watt LED, Hard-wired 120 VAC, 24.00" x 1.61" x 2.13"	Utilitech	Utilitech
143B	1	01141.9-00	Temperature Control Switch, N.O. Contact for fan control or high temperature alarm, Adjustable Set Point Range 32-140 deg.F, 15-amp rated contact at 120VAC	Stego	Graybar
150C	1	DAH4001B	Enclosure Heater, 400 W, 120 VAC/3.3 A, Forced Air with Thermostat	Hoffman	Graybar
159A	1	SCE-FA44	Fan, Filter & Grill Assembly, 120VAC, 4"	Saginaw	Saginaw
159B	1	SCE-FGA44	Filter & Grille Assembly, 4"	Saginaw	Saginaw
159C	2	SCE-RH44	Rain Hood, NEMA 3R, Fits 4" Fan & Filter Cutout	Saginaw	Saginaw
200B	70	3044102	Terminal Block, UT4, Gray, 26-10 AWG, 600V, 32A	Phoenix Contact	Graybar
201B	10	3044128	Terminal Block, Grounded, UT4-PE, Yellow-Green, 26-10 AWG	Phoenix Contact	Graybar
202A	6	3047028	Terminal Block End Barrier, UT2.5/10 Terminals	Phoenix Contact	Graybar
203A	20	0800886	Terminal Block End Clamp, 9.5mm Wide	Phoenix Contact	Graybar
204B	5	3030365	Terminal Block Plug-in Bridge, UT4, Red, 20 position (Trim as Required)	Phoenix Contact	Graybar
210A	18	1492-WFB424	Fuse Terminal Block, 5x20mm Fuse, Black, Red LED Indicator, 30-12 AWG, 15A @ 10-57VAC/VDC	Allen-Bradley	North Coast Electric
220A	4	0217.250HXP	Fuse, 0.25 A, Glass Body, 5x20mm, Fast Acting, 250VAC/60VDC	Littelfuse	Graybar
220B	10	0217.500HXP	Fuse, 0.5 A, Glass Body, 5x20mm, Fast Acting, 250VAC/60VDC	Littelfuse	Graybar
220H	4	0217002.HXP	Fuse, 2 A, Glass Body, 5x20mm, Fast Acting, 250VAC/60VDC	Littelfuse	Graybar
232A	1	2866310	Power Supply, TRIO Series, 24VDC (22.5-29.5VDC range setting), 5.0 A, 85-264VAC input	Phoenix Contact	Graybar
241C	6	1489-M1C050	Miniature Circuit Breaker, 1-Pole, 5A, Din Rail Mount, 277VAC/48VDC Max, Trip Curve C, 10kA, UL 489 Listed	Allen-Bradley	North Coast Electric
260A	1	UGB2/0-414-6	Ground Bus Bar, Tin Plated Copper, 5" x 5/8", 14 - 4 AWG, 6-port	Panduit	Graybar
307B	20	700-HK32Z24-4	Slim Line Control Relay, DPDT, 8A Contacts, 24 VDC Coil, Pilot Light	Allen-Bradley	North Coast Electric
307D	20	700-HN122	Slim Line Control Relay Base, Mini 8-Blade Base Socket, Screw Terminals	Allen-Bradley	North Coast Electric
321A	1	5600461	Receptacle, 15A/125VAC, DIN rail mounting, duplex	Phoenix Contact	Graybar
356B	2	800H-JR2B	Selector Switch, 3-Position, Maintained, 30mm, NEMA-4X, 2 NO/2 NC Contact	Allen-Bradley	North Coast Electric
356D	2	800H-JR91B	Selector Switch, 3-Position, Spring Return, 30mm, NEMA-4X, 2 NO/2 NC Contact	Allen-Bradley	North Coast Electric
364A	2	800H-QRBH2A	Pilot Light, Push-to-Test, LED, 12-130VAC/VDC, Amber, 30mm, NEMA-4X	Allen-Bradley	North Coast Electric
364C	2	800H-QRBH2R	Pilot Light, Push-to-Test, LED, 12-130VAC/VDC, Red, 30mm, NEMA-4X	Allen-Bradley	North Coast Electric
420D	1	943824002	Ethernet switch, SPIDER Series, 5-port 10/100 Copper, 10-30VDC Supply	Hirschmann	Graybar
455G	1	HMI5121XL	Graphic HMI, 12.1", Resolution 1024 x 768, Dark Grey Bezel, 1 GHz CPU, 256MB Flash Memory, 256 MB DRAM, Ethernet, 24VDC	Maple Systems	Maple Systems
510G	1	1769-L18ER-BB1B	CompactLogix Controller, Dual Ethernet w/DLR capability, 512KB Memory, 8 I/O Expansion via 1734 POINT I/O, 8 Ethernet IP Nodes, 24VDC (Controllers are shipped with 1GB SD card and can support up to 2GB SD card)	Allen-Bradley	North Coast Electric
536E	1	1734SC-IF4U	Analog Input Module, 4 Channel, Current or Voltage or RTD	Spectrum Controls	North Coast Electric
539A	1	1734-TB	Module Bases W/ Removable IEC Screw Terminals	Allen-Bradley	North Coast Electric

Technical Systems Inc Control Panel BOM			IPID Snow Creek Screen Design Washington Dept of Fish & Game		Customer - Washington Dept of Fish & Game Job Number - 7913
PartID	**Qty**	**Manufacturer Part Number**	**Description**	**Manufacturer**	**Vendor**
701D	1	HDL26030	Molded Case Circuit Breaker, 30 A, Thermal Magnetic, 25kAIC, 2-pole, 240VAC, Termination Lugs Included (#14-3/0 AWG)	Square D	Graybar
706D	1	9421LJ4	Rotary Operating Mechanism, Complete Kit Includes Base, Handle & Rod, 5.50" to 21.38" Mounting Depth, 6" Handle	Square D	Graybar
710C	1	9080LBA362106	Power Distribution Block, 600V, 175A, (1) Line #14-2/0, (6) Load #14-4 (2.10" x 2.90" x 5.37")	Square D	Graybar
711C	1	9080LB23	Clear plastic cover for Power Distribution Block (9080LBA362 Series)	Square D	Graybar
715B	1	SP50-240SP	Surge Protector; 240/120VAC Split Phase MOV 50kA, SCCRkA, NEMA 4X Enclosure	Transtector Systems	Allied Electronics
720M	4	LP-CC-15	Fuse, 15 Amp, Class CC-Rejection, 600VAC/200kAIC, Current limiting, Time delay	Bussmann	Graybar
725A	2	CCP-2-30CC	Fuse Holder, 2 Pole w/ Indicator, Class CC-Rejection, 600VAC/30 Amp, 200kA Interrupt Rating, Branch Circuit Protection Rated, Padlockable in Open/Off Position	Bussmann	Graybar
736Q	2	CRX07D6BC	Line Reactor, 5% Impedance, for 480 VAC 3 phase, 5.0 HP VFD, 7.6 A Max	Hammond Power Solutions	Industrial Controls
740B	2	25B-A4P8N104	PowerFlex 525 AC Drive, with Embedded EtherNet/IP and Safety, 240 VAC, 1 Phase, 1.0 HP, 0.75 kW Normal Duty; 1.0 HP, 0.75 kW Heavy Duty, Frame A, IP20 NEMA / Open Type, No Filter	Allen-Bradley	North Coast Electric
			Instruments		
L-013A	2	LVU816	Ultrasonic Level Transmitter, LVU800 Series, 24VDC Loop Powered, 4-20mA Output, Beam Width 3", Max Measurement Range 18' NEMA 4X	Omega	Omega

ITEMS 122H, 138J

SAGINAW CONTROL & ENGINEERING
Your Enclosure Source®

ENVIROLINE® SERIES SINGLE-DOOR ENCLOSURES WITH 3-POINT HARDWARE

Application

Designed to house electrical and electronic controls, instrumentation and components in indoor or outdoor locations. For outdoor applications a drip shield is recommended. For installation information, consult our Installation Manual at www.saginawcontrol.com.

Construction

- 0.075" carbon steel.
- Seams continuously welded and ground smooth.
- Flange trough collar around all sides of door opening.
- Collar studs provided for mounting optional sub-panels.
- Mounting holes in back of the enclosure for wall mounting.
- Mounting hardware, sealing washers and hole plugs included.
- Concealed hinges.
- Removable and interchangeable doors.
- Black zinc die cast keylocking/padlocking handles.
- 3-point latching mechanism.
- Black quarter turn latches as required.
- Removable print pocket.
- Oil and water resistant gasket.
- Ground stud on door and body.
- Provision for Lifting Lugs included on enclosures with Height >48" and with Depth >16". Lifting Lug assembly included with the enclosure bolt pack.

Finish

ANSI-61 gray powder coated inside and out. Optional sub-panels powder coated white.

IS4 Industry Standards

NEMA Type 3R, 4, 12 & Type 13
UL Listed Type 3R, 4 & 12
CSA Type 3R, 4 & 12
IEC 60529 IP66

***To maintain Type 3R listing, Drainage is required. Install equally rated drainage device or drill a 1/8 to 1/4 inch hole in the bottom center of the enclosure, approximately 1 inch from the right, and 1 inch from the left for drainage, use listed rain-tight or wet location hubs. Drip shield over the door is recommended for all outdoor applications.

Enclosure Product Code E3					Sub-Panel (P3)		
Catalog No.	Height (A)	Width (B)	Depth (C)	Industry Standard	Catalog No.	Panel Height (D)	PanelWidth (E)
SCE-24EL2010LPPL	24.00	20.00	10.00	IS4	SCE-24P20	21.00	17.00
SCE-24EL2410LPPL	24.00	24.00	10.00	IS4	SCE-24P24	21.00	21.00
SCE-30EL2412LPPL	30.00	24.00	12.00	IS4	SCE-30P24	27.00	21.00
SCE-30EL3012LPPL	30.00	30.00	12.00	IS4	SCE-30P30	27.00	27.00
SCE-36EL2412LPPL	36.00	24.00	12.00	IS4	SCE-36P24	33.00	21.00
SCE-36EL3012LPPL	36.00	30.00	12.00	IS4	SCE-36P30	33.00	27.00
SCE-42EL3612LPPL	42.00	36.00	12.00	IS4	SCE-42P36	39.00	33.00
SCE-48EL3612LPPL	48.00	36.00	12.00	IS4	SCE-48P36	45.00	33.00
SCE-48EL3616LPPL	48.00	36.00	16.00	IS4	SCE-48P36	45.00	33.00
SCE-60EL3612LPPL	60.00	36.00	12.00	IS4	SCE-60P36	57.00	33.00
SCE-60EL3616LPPL	60.00	36.00	16.00	IS4	SCE-60P36	57.00	33.00
SCE-60EL3624LPPL	60.00	36.00	24.00	IS4	SCE-60P36	57.00	33.00
SCE-72EL3624LPPL	72.00	36.00	24.00	IS4	SCE-72P36	69.00	33.00

www.saginawcontrol.com • 95 Midland Rd, Saginaw MI 48638 • Phone: 989-799-6871 Fax: 989-799-4524

SAGINAW CONTROL & ENGINEERING
Your Enclosure Source®

ENVIROLINE® SERIES SINGLE-DOOR ENCLOSURES WITH 3-POINT HARDWARE TECHNICAL DATA

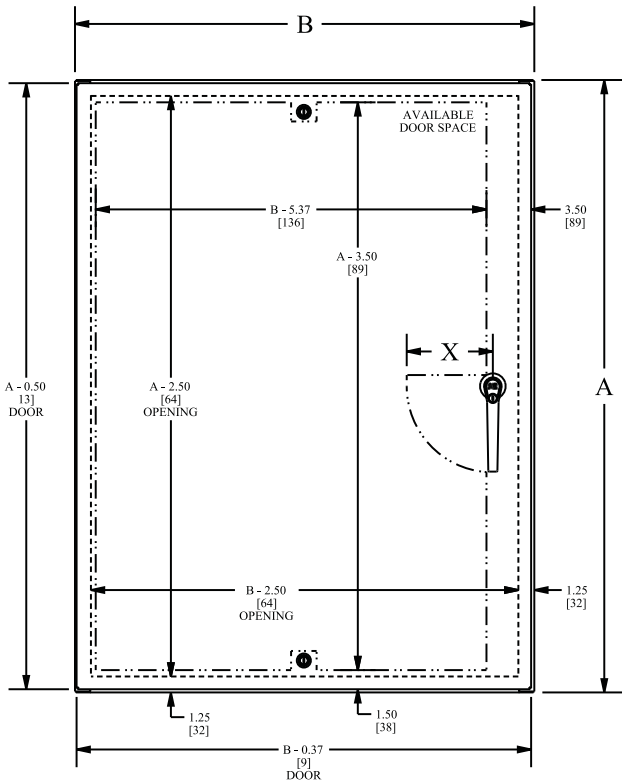

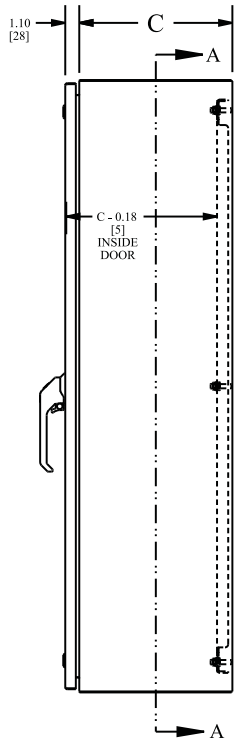

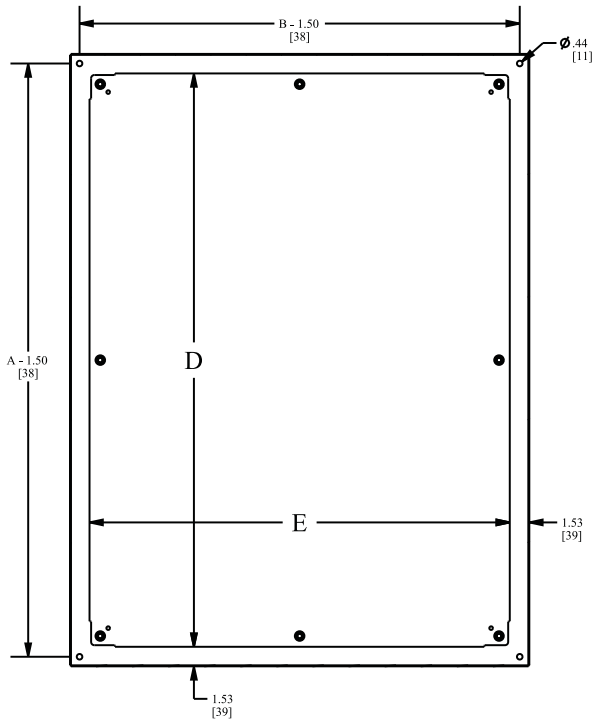

LATCH NOTES:

OMIT CENTER LATCH TOP AND BOTTOM OF DOOR WHEN DOOR WIDTH IS < 30.00 [762]

HANDLE NOTES:

WHEN ENCLOSURE HEIGHT <= 42.00 [1067]
"X" = 5.50 [140]

WHEN ENCLOSURE HEIGHT > 42.00 [1067]
"X" = 6.75 [172]

www.saginawcontrol.com • 95 Midland Rd, Saginaw MI 48638 • Phone: 989-799-6871 Fax: 989-799-4524

SAGINAW CONTROL & ENGINEERING
Your Enclosure Source®

MOUNTING PANELS

DEAD FRONT PANEL FOR WALL-MOUNT ENCLOSURES

Catalog No.	Height	Width	Product Code
SCE-DF20EL16LP	16.00	12.63	P2
SCE-DF20EL20LP	16.00	16.63	P2
SCE-DF24EL20LP	20.00	16.63	P2
SCE-DF24EL24LP	20.00	20.63	P2
SCE-DF30EL20LP	26.00	16.63	P2
SCE-DF30EL24LP	26.00	20.63	P2
SCE-DF30EL30LP	26.00	26.63	P2
SCE-DF36EL20LP	32.00	17.63	P2
SCE-DF36EL24LP	32.00	20.63	P2
SCE-DF36EL30LP	32.00	26.63	P2
SCE-DF36EL36LP	32.00	32.63	P2
SCE-DF42EL24LP	38.00	20.63	P2
SCE-DF42EL30LP	38.00	26.63	P2
SCE-DF42EL36LP	38.00	32.63	P2
SCE-DF48EL24LP	44.00	20.63	P2
SCE-DF48EL36LP	44.00	32.63	P2
SCE-DF60EL36LP	56.00	32.63	P2
SCE-DF72EL36LP	68.00	32.63	P2

Designed for use in Wall Mount Enclosures with SCE concealed hinges, to be installed in the front of an enclosure and to swing out of the enclosure. Kit consists of heavy gauge brackets, hinges, and mounting hardware. Installed by detaching door hinge from enclosure and installing swing out panel kit to the existing holes. Hinge supplied with the enclosure. Made of steel and powder coated white.

Provided with UL Recognized sealing washer to maintain Environmental Rating of the enclosure.

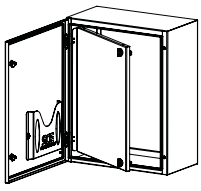

WALL MOUNT
SCE-DFxxELxxLP

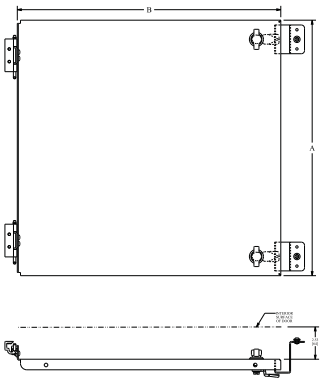

DEAD FRONT PANEL FOR CHNF & ELJ ENCLOSURES

Catalog No.	Height	Width	Product Code
SCE-DFJ1008	8.50	6.50	P2
SCE-DFJ1210	10.50	8.50	P2
SCE-DFJ1212	10.50	10.50	P2
SCE-DFJ1412	12.50	10.50	P2
SCE-DFJ1614	14.50	12.50	P2
SCE-DFJ2016	18.50	14.50	P2

Designed for installation into Enviroline® Series junction enclosures and continuous hinged junction enclosures, to be installed in the front of an enclosure and to swing out of the enclosure. Kit consists of heavy gauge brackets, hinges, and mounting hardware. Installed by drilling hole in the side of the enclosure. Made of steel and powder coated white.

Provided with UL Recognized sealing washer to maintain Environmental Rating of the enclosure.

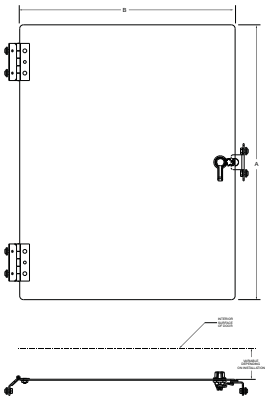

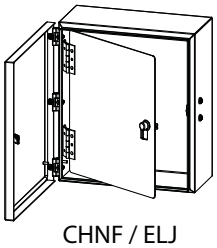

CHNF / ELJ
SCE-DFJxx

www.saginawcontrol.com • 95 Midland Rd, Saginaw MI 48638 • Phone: 989-799-6871 Fax: 989-799-4524

SAGINAW CONTROL & ENGINEERING
Your Enclosure Source®

MOUNTING OPTIONS

MOUNTING FOOT KIT

Made for use with all SCE Enviroline® Series enclosures and two-door wall-mount enclosures. Chemical and Corrosion resistant Polyamide material for use in type 3, 3R, 4, 4X and 12 enclosures.

Catalog No.	Fasteners	Qty Per Kit	NEMA Rating	Product Code
SCE-ELMFK4	Stainless Steel	4	4 & 12	P2
SCE-ELMFK6	Stainless Steel	6	4 & 12	P2
Bulk Parts				
SCE-ELMFK4-25	Stainless Steel	25 sets of 4	4 & 12	V1

Catalog No.	Fasteners	Qty Per Kit	NEMA Rating	Product Code
SCE-ELMFK4SS6-OS	Stainless Steel Type 316	4	4, 4X & 12	P2

S.S. MOUNTING FOOT KIT

Made for use with all SCE Enviroline® Series enclosures and two-door wall-mount enclosures. Made of heavy gauge stainless steel type 316/316L with stainless steel stud. Available in kits of four.

TYPE 3R MOUNTING FOOT KIT

Designed for use on large wall-mount type 3R enclosures. Four mounting feet per kit, made of heavy gauge carbon steel and powder coated ANSI-61 gray. Hardware is included to fasten mounting foot kit to the enclosure. .

Provided with UL Recognized sealing washer to maintain Environmental Rating of the enclosure.

Catalog No.	Height (A)	Width (B)	Depth (C)	Product Code
SCE-N3RMFK4	3.25	2.00	0.51	P2

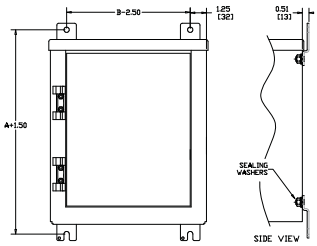

ENVIROLINE® JUNCTION ENCLOSURE (ELJ MOUNTING) FOOT KIT

Made for use with all SCE Enviroline® Series junction enclosures. Chemical and Corrosion resistant Polyamide material rated for type 3, 3R, 4, 4X and 12 with stainless steel fasteners. Four mounting feet per kit. Hardware is included to fasten mounting foot kit to the enclosure.

Catalog No.	Height (A)	Width (B)	Qty Per Kit	Product Code
SCE-ELJMFK	2.13	1.25	4	P2

S.S. ENVIROLINE® JUNCTION ENCLOSURE (ELJ MOUNTING) FOOT KIT

Made for use with all SCE Enviroline® Series junction enclosures. Four mounting feet per kit, made from type 304 stainless steel. Hardware is included to fasten the mounting foot kit to the enclosure.

Catalog No.	Height (A)	Width (B)	Qty Per Kit	Product Code
SCE-ELJMFKSS-OS	2.13	1.25	4	P2

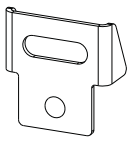

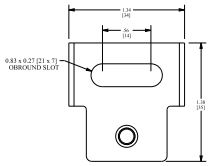

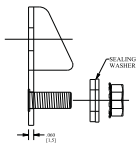

SAGINAW CONTROL & ENGINEERING
Your Enclosure Source®

GENERAL ACCESSORIES

DRIP SHIELD KIT FOR TYPE 12 & 4 ENCLOSURES

Protects door against dripping water and settling dust. Stainless steel screws and sealing washers are supplied with each kit. Made of steel and powder coated.

Provided with UL Recognized sealing washer to maintain Environmental Rating of the enclosure.

Catalog No.	Fits Enclosure Width (B)	Finish	Produc Code
SCE-DS12N4	12.00	ANSI-61 Gray	P2
SCE-DS16N4	16.00	ANSI-61 Gray	P2
SCE-DS20N4	20.00	ANSI-61 Gray	P2
SCE-DS24N4	24.00	ANSI-61 Gray	P2
SCE-DS30N4	30.00	ANSI-61 Gray	P2
SCE-DS36N4	36.00	ANSI-61 Gray	P2
SCE-DS42N4	42.00	ANSI-61 Gray	P2
SCE-DS48N4	48.00	ANSI-61 Gray	P2
SCE-DS60N4	60.00	ANSI-61 Gray	P2
SCE-DS72N4	72.00	ANSI-61 Gray	P2
SCE-DS12N4LG	12.00	RAL 7035 Gray	P2
SCE-DS16N4LG	16.00	RAL 7035 Gray	P2
SCE-DS20N4LG	20.00	RAL 7035 Gray	P2
SCE-DS24N4LG	24.00	RAL 7035 Gray	P2
SCE-DS30N4LG	30.00	RAL 7035 Gray	P2
SCE-DS36N4LG	36.00	RAL 7035 Gray	P2

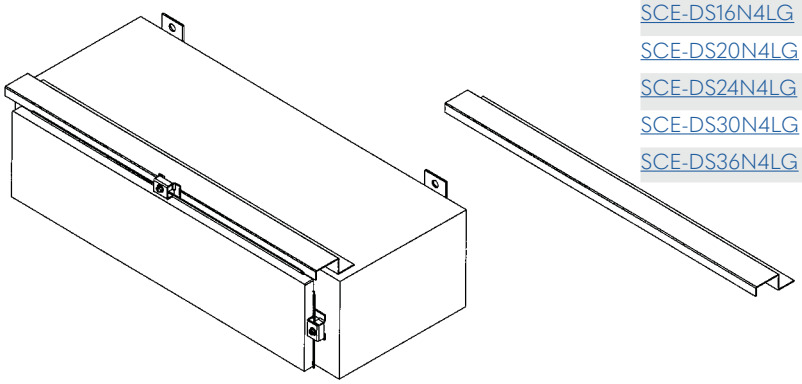

STAINLESS STEEL DRIP SHIELD KIT FOR TYPE 4X ENCLOSURES

Protects door against dripping water and settling dust. Furnished with stainless steel screws and sealing washers. Kit made of stainless steel Type 304.

Provided with UL Recognized sealing washer to maintain Environmental Rating of the enclosure.

Catalog No.	Fits Enclosure Width (B)	Product Code
304 Stainless Steel		
SCE-DS12SS	12.00	P2
SCE-DS16SS	16.00	P2
SCE-DS20SS	20.00	P2
SCE-DS24SS	24.00	P2
SCE-DS30SS	30.00	P2
SCE-DS36SS	36.00	P2
SCE-DS42SS	42.00	P2
SCE-DS48SS	48.00	P2
SCE-DS60SS	60.00	P2
SCE-DS72SS	72.00	P2
316 Stainless Steel		
SCE-DS12SS6	12.00	P2
SCE-DS16SS6	16.00	P2
SCE-DS20SS6	20.00	P2
SCE-DS24SS6	24.00	P2
SCE-DS30SS6	30.00	P2
SCE-DS36SS6	36.00	P2
SCE-DS42SS6	42.00	P2
SCE-DS48SS6	48.00	P2
SCE-DS60SS6	60.00	P2
SCE-DS72SS6	72.00	P2

www.saginawcontrol.com • 95 Midland Rd, Saginaw MI 48638 • Phone: 989-799-6871 Fax: 989-799-4524

REMOTE DOOR SWITCHES

- The remote door switch can activate a light or other electrical component when the enclosure door is opened
- Mounts on enclosure frame and includes mounting hardware
- Mounting plate is 14 gauge steel with a plated finish
- Can be hard-wired to the PANELITE LED or Fluorescent light or connected via the PANELITE Door Switch Cable

BULLETIN: A80LT, P20

Catalog Number	Description
ALFSWD	Door switch assembly (order connection cable separately)
PLFSWD	Door switch assembly for PROLINE and PROLINE G2 (order connection cable separately)

TOUCH-SAFE UL LIGHT SWITCH

APPLICATION

The Touch-Safe light switch is designed to be used with Hoffman light kits (AC and DC). It provides a UL listed touch-safe switch that can be used on many enclosure types and includes hardware for most applications. The light switch maintains enclosure overall rating up to UL 508A Type 4X or 12.

FEATURES

- UL listed for a touch-safe wire connection
- Easily mounted to various enclosure types; common bracket and hardware included for many enclosure types (NEMA, CONCEPT/ FUSION G7, PROLINE, Free-Stand Type 12)
- Cable PG compression hub
- Wide operating temperature range: -49°F to +158°F (-45°C to 70°C)
- Rugged die-cast anodized zinc construction
- Connection 3 cage clamps for solid and stranded wire AWG 20-14 (0.5-2.5mm²)
- Protection class I (grounded)

BULLETIN: A80LT

Catalog Number	Max. Cable Dia.	Max. Voltage
LDSWITCH	.375 in.	250 AC / 48 DC

MOUNTING BRACKET KIT FOR LIGHT PACKAGE

Kit simplifies mounting light package in Hoffman PROLINE disconnect enclosures. Includes brackets, all mounting hardware and complete instructions.

BULLETIN: A80LT

Catalog Number	Description
PDLFBRKT	Mounting Bracket Kit

LED PUCK LIGHT

The LED Puck Light is ideal for remote and darkened applications. This versatile light provides mounting flexibility; it can be magnetically attached to flat steel surfaces or can be hung with a swivel hook. This small form factor, light-weight LED light provides superior lighting performance with minimal power consumption. It can be used as a three-LED flashlight or as a 24-LED work light with operating temperature of 40 F to 120 F (4 C to 48 C). An on/off switch is incorporated in the light and three AAA batteries are included.

BULLETIN: A80LT

Catalog Number	AxBxC in./mm	Product Weight
LEDPUCK	2.25 x 3.75 x 1.38 57 x 95 x 35	0.22 lbs.

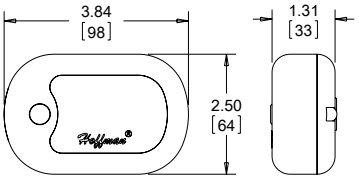

89097656

ITEM 142A

UTILITECH PRO

ITEM #0595682, 0595683, 0595684, 0595685

STRIP LIGHT

MODEL #MXL2005-LED1X10K840
MXL2005-LED1X20K840
MXL2005-LED2X10K840
MXL2005-LED2X20K840

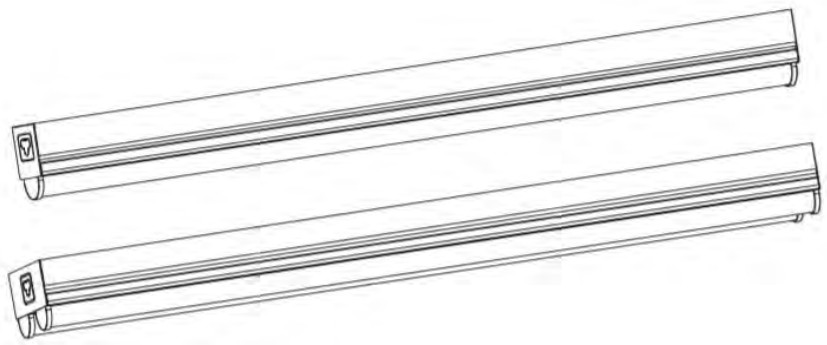

Description

Strip (Common: 2-ft; Actual: 2-ft)

- Energy saving LED uses 41% less electricity than a comparable 1-light T8 fluorescent light fixture
- LED lasts longer - rated to last 35,000 hours
- Produces 900 lumens of brightness using only 10 watts
- 10 watt integrated LED therefore no light bulbs will need to be replaced
- Easy to link up to thirty 24-inch, 1-light LED strip lights
- Gives off bright white light that is perfect for detailed tasks (4,000k CCT)
- UL rated for damp locations
- 3 year limited warranty
- White metal housing

ITEM 142A

Specifications

Type	Strip
Number of Bulbs Required (Count)	0
Bulb Length (Inches)	24
Ballast Grade	Residential/Commercial
ENERGY STAR Qualified	Yes
Maximum Fixture Wattage	10
Actual Fixture Length (Inches)	24
Actual Fixture Width (Inches)	1.61
Actual Fixture Height (Inches)	2.13
Common Fixture Length	2-ft
Weight (lbs.)	1.7
Lens Included	Yes
Lens Type	Frosted acrylic

Color/Finish Family	White
Motion Activated	No
Hardwired or Plug-In	Hardwired
Title 24 Compliant	No
UL Safety Listing	Yes
CSA Safety Listing	No
ETL Safety Listing	No
Bulbs Included	Yes
Light Bulb Base Type	LED
Recommended Light Bulb Shape	LED
Collection Name	N/A
Bulb Type	LED

SAFETY INFORMATION

NOTICE

- This equipment has been tested and found to comply with the limits for a Class B digital device, pursuant to part 15 of the FCC Rules. These limits are designed to provide reasonable protection against harmful interference in a residential installation. This equipment generates, uses and can radiate radio frequency energy and, if not installed and used in accordance with the instructions, may cause harmful interference to radio or television reception, which can be determined by turning the equipment off and on. The user is encouraged to try to correct the interference by one or more of the following measures:
  - Reorient or relocate the receiving antenna.
  - Increase the separation between the equipment and the receiver.
  - Connect the equipment into an outlet on a circuit different from that to which the receiver is connected.
  - Consult the dealer or an experienced radio/TV technician for help.
- This Class B digital apparatus complies with Canadian ICES-003.

ITEM #	MODEL #	MAXIMUM NUMBER OF LINKED FIXTURES
Item # 595682	MXL2005-LED1X10K840	Connect up to 30 fixtures.
Item # 595683	MXL2005-LED1X20K840	Connect up to 15 fixtures.
Item # 595684	MXL2005-LED2X10K840	Connect up to 15 fixtures.
Item # 595685	MXL2005-LED2X20K840	Connect up to 7 fixtures.

c UL us LISTED

Small, compact Thermostat KTO 011 / KTS 011

- **Large setting range**
- **Small size**
- **Simple to mount**
- **High switching performance**

KTO 011: Thermostat (normally closed); contact breaker for regulating heaters.

KTS 011: Thermostat (normally open); contact maker for regulating of filter fans and heat exchangers or for switching signal devised when temperature limit has been exceeded.

CE

Technical Data

Switch temperature difference	7K (± 4K tolerance)
Sensor element	thermostatic bimetal
Contact type	snap-action contact
Contact resistance	< 10mOhm
Service life	> 100,000 cycles
Max. Switching capacity	250VAC, 10 (2) A
	120VAC, 15 (2) A
	DC 30W
EMC	acc. to EN 55014-1-2, EN 61000-3-2, EN 61000-3-3
Connection	2-pole terminal for 2.5mm², clamping torque 0.8Nm
Mounting	clip for 35mm DIN rail, EN50022
	(or for exit filter EF 118 Series)
Casing	plastic according to UL94 V-0, light grey
Dimensions	60 x 33 x 43mm
Weight	approx. 40g
Fitting position	variable
Operating/Storage temperature	-20 to +80 °C (-4 to +176 °F) / -45 to +80 °C (-49 to +176 °F)
Protection type	IP20

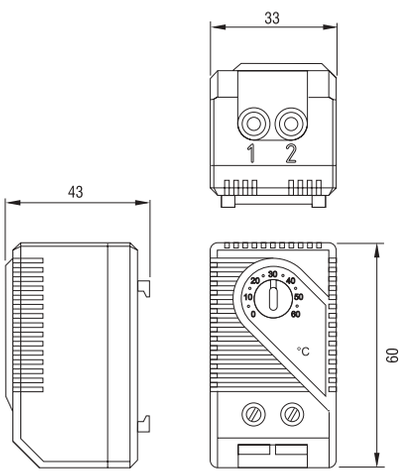

Thermostat KTO 011 (NC)

Thermostat KTS 011 (NO)

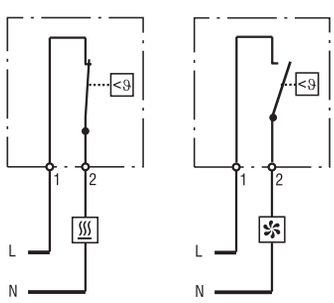

Example of connection

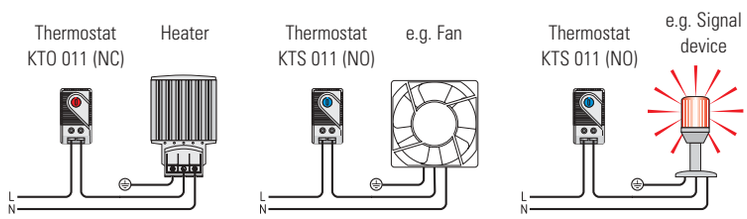

Example of connection

Setting range	Art. No. Contact Breaker (NC)	Art. No. Contact Maker (NO)	Approvals
0 to +60°C	01140.0-00	01141.0-00	VDE
-10 to +50°C	01142.0-00	01143.0-00	VDE
+20 to +80°C	01159.0-00	01158.0-00	VDE
+32 to +140°F	01140.9-00	01141.9-00	UL File No. E164102
+14 to +122°F	01142.9-00	01143.9-00	UL File No. E164102
0 to +60°C	01146.9-00	01147.9-00	UL File No. E164102

ITEM 150C

Performance Data 100 and 200 Watt Heaters

CATALOG NUMBERS	DAH1001A	DAH1002A	DAH2001A	DAH2002A
ELECTRICAL DATA				
Rated Voltage	**115**	**230**	**115**	**230**
Frequency (Hz)	50/60	50/60	50/60	50/60
Power Consumption (Watts)	100	100	200	200
Nominal Current (Amps)	0.98	0.49	1.89	0.95
HEATING PERFORMANCE				
Watts	**100**	**100**	**200**	**200**
UNIT CONSTRUCTION				
Weight (lb./kg)	1.6/0.73	1.6/0.73	1.6/0.73	1.6/0.73
X (in./mm)	4.00/102	4.00/102	6.00/152	6.00/152

Performance Data 400 and 800 Watt Heaters

CATALOG NUMBERS	DAH4001B	DAH4002B	DAH8001B	DAH8002B
ELECTRICAL DATA				
Rated Voltage	**115**	**230**	**115**	**230**
Frequency (Hz)	50/60	50/60	50/60	50/60
Power Consumption (Watts)	400	400	800	800
Nominal Current (Amps)	3.72	1.86	7.37	3.69
HEATING PERFORMANCE				
Watts	**400**	**400**	**800**	**800**
UNIT CONSTRUCTION				
Weight (lb./kg)	2.2/1.00	2.2/1.00	2.2/1.00	2.2/1.00
X (in./mm)	6.00/152	6.00/152	8.00/203	8.00/203

Performance Data 1300 Watt Heaters

CATALOG NUMBERS	DAH13001C	DAH13002C
ELECTRICAL DATA		
Rated Voltage	**115**	**230**
Frequency (Hz)	50/60	50/60
Power Consumption (Watts)	1300	1300
Nominal Current (Amps)	11.5	5.7
HEATING PERFORMANCE		
Watts	**1300**	**1300**
UNIT CONSTRUCTION		
Weight (lb./kg)	3.4/1.54	3.4/1.54
X (in./mm)	8.00/203	8.00/203

Dimensions and Clearance Range Drawing for DAH1001A, -2A and DAH2001A, -2A

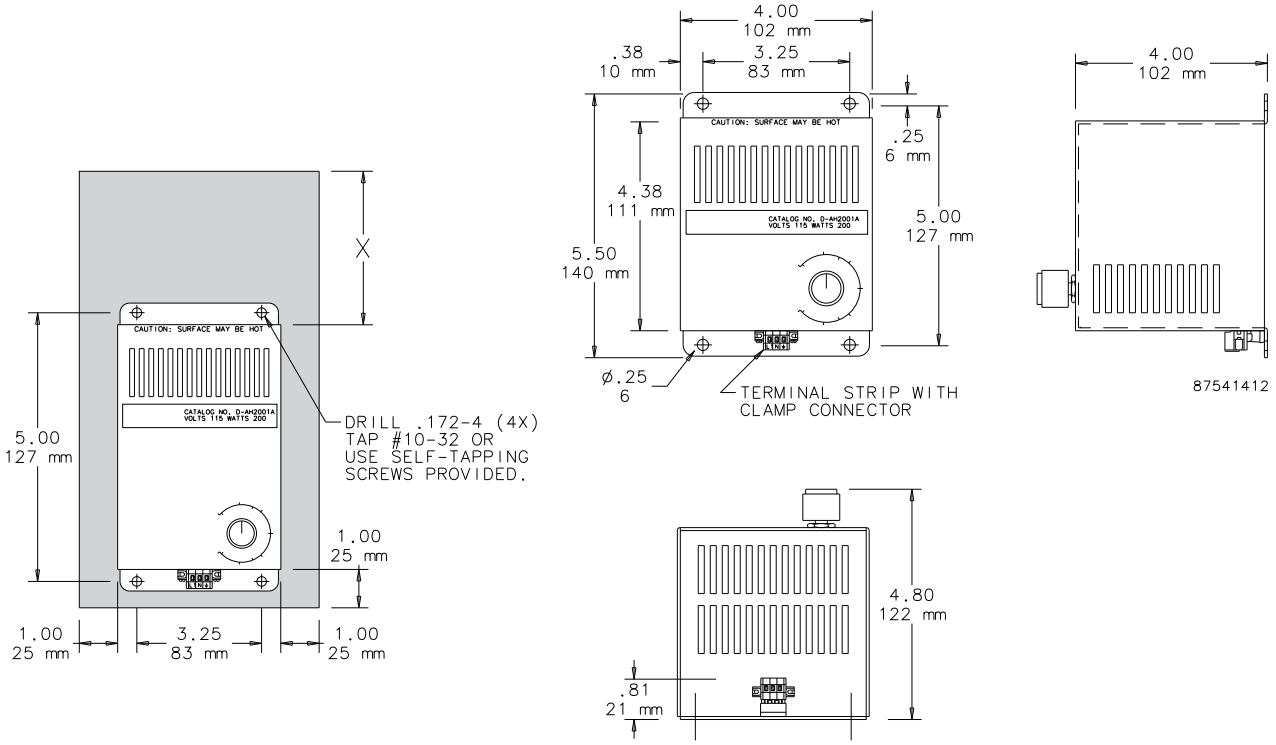

Dimensions and Clearance Range Drawing for DAH4001B, -2B and DAH8001B, -2B

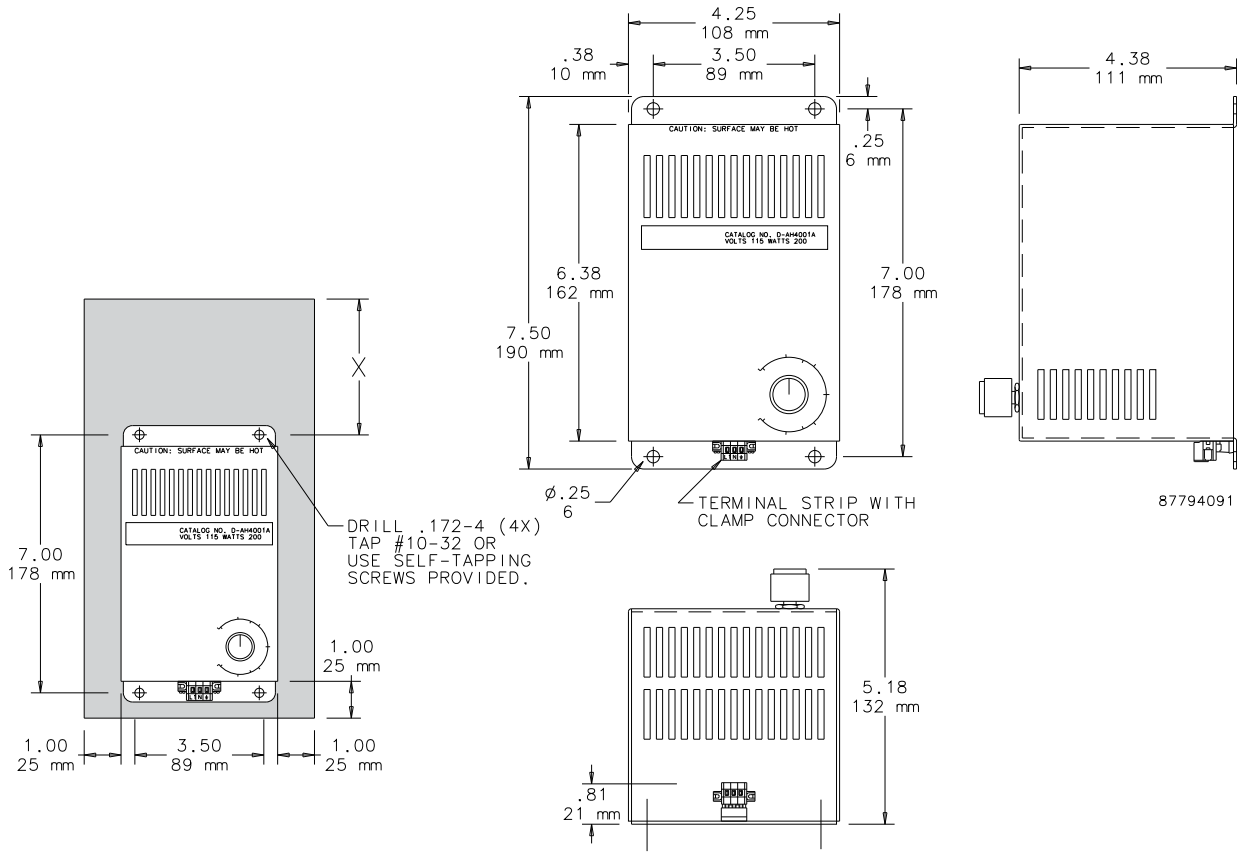

SAGINAW CONTROL & ENGINEERING
Your Enclosure Source®

TYPE 12 EXHAUST FILTERS - BLACK

Easy to install snap fit design for use on air discharge side of cooling fan package for Type 1 & 12 applications. Housing and grille are made of black heat resistant (ABS-FR), self-extinguishing material with a Type 12 filter. UL Listed Type 12

Catalog No.	Height (A)	Width (B)	Depth (C)	Cutout Size (F)	Product Code
SCE-N12FGA33	4.20	4.20	0.50	3.64	P1
SCE-N12FGA44	5.91	5.91	1.15	5.03 Sq.	P1
SCE-N12FGA66	9.84	9.84	1.33	8.91 Sq.	P1
SCE-N12FGA1010	12.8	12.8	1.34	11.57 Sq.	P1

Catalog No.	Height (A)	Width (B)	Depth (C)	Cutout Size (F)	Product Code
SCE-N12FGA33LG	4.19	4.19	0.91	3.64	P1
SCE-N12FGA44LG	5.91	5.91	1.15	5.03 Sq.	P1
SCE-N12FGA66LG	9.84	9.84	1.33	8.91 Sq.	P1
SCE-N12FGA1010LG	12.80	12.80	1.34	11.57 Sq.	P1

TYPE 12 EXHAUST FILTER - RAL 7035 GRAY

Easy to install snap fit design for use on air discharge side of cooling fan package for Type 1 & 12 applications. Housing and grille are made of gray heat resistant (ABS-FR), self-extinguishing material with a Type 12 filter. UL Listed Type 12

TYPE 3R EXHAUST FILTERS

Easy to install snap fit design for use on air discharge side of cooling fan package for Type 3R applications. Grille is made of black UV and water resistant, self-extinguishing PVC material, housing is ABS material with steel inner guard for increased impact resistance.

UL ListedType 3R

Catalog No.	Height (A)	Width (B)	Depth (C)	Cutout Size (F)	Product Code
SCE-N3RFGA44	5.90	5.90	1.20	5.03 Sq.	P1
SCE-N3RFGA66	9.80	9.80	1.30	8.91 Sq.	P1
SCE-N3RFGA1010	12.80	12.80	1.30	11.57 Sq.	P1

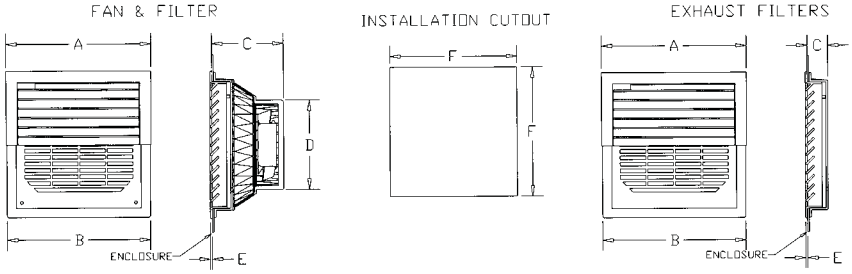

Catalog No.	Height (A)	Width (B)	Depth (C)	Cutout Size (F)	Cutout Size (G)	CFM	Product Code
SCE-FA44	6.11	7.38	3.28	5.66	5.91	63/75	P1
SCE-FA44-230	6.11	7.38	3.28	5.66	5.91	63/75	P1
SCE-FA44-24VDC	6.11	7.38	3.28	5.66	5.91	155	P1
SCE-FA66	7.61	8.88	3.75	7.16	7.41	135/158	P1
SCE-FA66-230	7.61	8.88	3.75	7.16	7.41	135/158	P1
SCE-FA66-24VDC	7.61	8.88	3.75	7.16	7.41	155	P1
SCE-FA1010	11.62	12.88	5.25	11.16	11.41	400/440	P1
SCE-FA1010-230	11.62	12.88	5.25	11.16	11.41	400/440	P1
SCE-FA1010-24VDC	11.62	12.88	5.25	11.16	11.41	425	P1

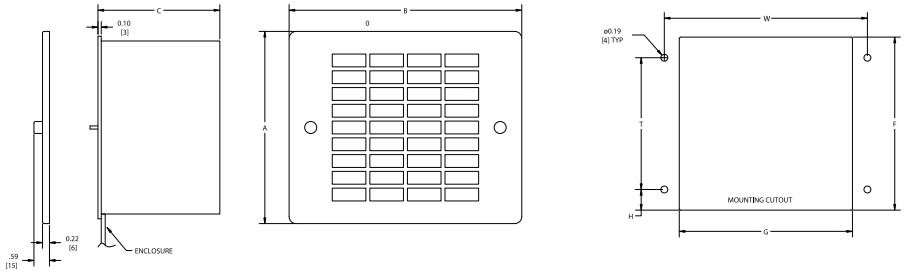

FAN PACKAGE

Designed for use in enclosures that require cooling but have limited space. Consists of a washable aluminum filter, steel air plenum, removable stainless steel grille, single phase fan, and approximately 14 inches of lead wire. Grille has captivated thumb nuts for easy access to the filter from the outside. Fans are available in 115 or 230 volt AC or 24 volt DC, 50/60 Hertz (Hz) single phase. Air plenum is ANSI-61 gray powder coated. For installation information, please consult our Installation Manual at www.saginawcontrol.com. UL listed motor.

www.saginawcontrol.com • 95 Midland Rd, Saginaw MI 48638 • Phone: 989-799-6871 Fax: 989-799-4524

SAGINAW CONTROL & ENGINEERING
Your Enclosure Source®

ENVIRO-THERM® THERMAL MANAGEMENT

FILTER AND GRILLE PACKAGE

Designed for use on air discharge side of cooling fan package. Stainless steel grille with captivated thumb screws. Aluminum mounting brackets and aluminum filter. Mounting hardware is furnished.

Catalog No.	Height (A)	Width (B)	Cutout Size (F)	Cutout Size (G)	Product Code
SCE-FGA44	6.11	7.38	5.66	5.91	P1
SCE-FGA66	7.61	8.88	7.16	7.41	P1
SCE-FGA1010	11.62	12.88	11.16	11.41	P1

RAIN HOOD WITH ACCESS COVER

Catalog No.	Height (A)	Width (B)	Depth (C)	Product Code
SCE-RH4N12	9.44	8.25	4.50	P1
SCE-RH6N12	13.44	12.25	4.50	P1
SCE-RH10N12	16.44	15.25	4.50	P1
Stainless Steel				
SCE-RH4N12SS	9.44	8.25	4.50	P1
SCE-RH6N12SS	13.44	12.25	4.50	P1
SCE-RH10N12SS	16.44	15.25	4.50	P1

Designed for use with Type 12 fan and filter kits to prevent rain, sleet, snow, dropping water or fluids from being drawn into the enclosure. Removable cover for easy access to fan and filter kits. Made of heavy gauge galvannealed steel and powder coated ANSI-61 gray. "SS" kits are made of Type 304 stainless steel with #4 brushed finish. UL Recognized. For installation information, please consult our Installation Manual at www.saginawcontrol.com.
Note: Fan and Filter Kit are sold separately.
UL Listed Type 3R

4X RAIN HOOD

Catalog No.	Height (A)	Width (B)	Depth (C)	Finish	Product Code
SCE-RH3N4XSS	9.10	5.90	4.30	#4 Brushed Finish	P1
SCE-RH4N4XSS	9.10	6.90	2.20	#4 Brushed Finish	P1
SCE-RH6N4XSS	15.40	11.10	3.30	#4 Brushed Finish	P1
SCE-RH10N4XSS	18.90	13.80	4.30	#4 Brushed Finish	P1

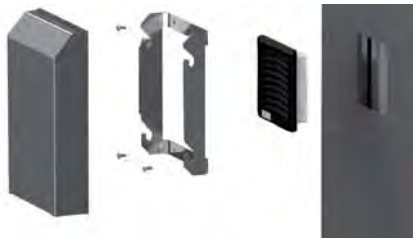

Designed for use in conjunction with the Type 12 Fan and Filter Packages to increase the ingress protection rating of the assembly to a 4X. 304 Stainless #4 brushed finish. Sanitary FDA compliant gaskets that make it easy to detect contamination. Removable rain hood for maintenance and replacement of filter without tools. For installation information, please consult our Installation Manual at www.saginawcontrol.com.

Note: Fan and Filter Kit are sold separately.
UL Listed Type 3, 3R, 4, 4X and 12
IEC IP 65

RAIN HOOD

Catalog No.	Height (A)	Width (B)	Depth (C)	Finish	Product Code
SCE-RH44	8.09	7.62	4.50	ANSI-61 Gray	P1
SCE-RH66	8.46	9.24	4.56	ANSI-61 Gray	P1
SCE-RH1010	12.34	13.12	4.50	ANSI-61 Gray	P1
SCE-RH66-05	8.46	9.24	4.56	SCE-05 White	P1
SCE-RH1010-05	12.34	13.12	4.50	SCE-05 White	P1
Stainless Steel					
SCE-RH44SS	8.09	7.62	4.50	#4 Brushed Finish	P1
SCE-RH66SS	8.46	9.24	4.56	#4 Brushed Finish	P1
SCE-RH1010SS	12.34	13.12	4.50	#4 Brushed Finish	P1

Designed for use with standard fan and filter kits to prevent rain, sleet, snow, dropping water or fluids from being drawn into the enclosure. Made of heavy gauge galvannealed steel and powder coated. "SS" kits are made of Type 304 stainless steel with #4 brushed finish. UL Recognized. For installation information, please consult our Installation Manual at www.saginawcontrol.com.

Note: Fan and Filter Kit are sold separately.

UL Listed Type 3R

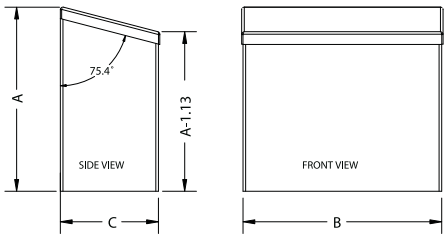

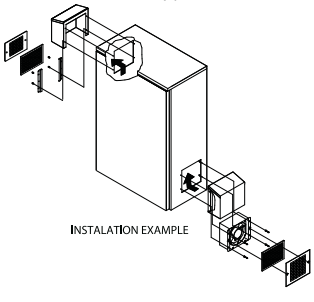

https://www.phoenixcontact.com/us/products/3044102

Feed-through terminal block - UT 4 - 3044102

Please be informed that the data shown in this PDF Document is generated from our Online Catalog. Please find the complete data in the user's documentation. Our General Terms of Use for Downloads are valid
(http://phoenixcontact.com/download)

Feed-through terminal block, nom. voltage: 1000 V, nominal current: 32 A, connection method: Screw connection, number of connections: 2, cross section: 0.14 mm² - 6 mm², AWG: 26 - 10, width: 6.2 mm, height: 46.9 mm, color: gray, mounting type: NS 35/7,5, NS 35/15

Your advantages

- The large wiring space enables the connection of solid and stranded conductors without ferrules, even above the nominal cross section
- As well as saving space, the compact design enables user-friendly wiring in a small amount of space
- Optimum screwdriver guidance through closed screw shafts
- Tested for railway applications
- The cable entry funnel enables the use of conductors with ferrules and plastic collars within the nominal cross section

Key Commercial Data

Packing unit	1 pc
Minimum order quantity	50 pc
GTIN	4 017918 960391
GTIN	4017918960391
Weight per Piece (excluding packing)	9.600 g
Custom tariff number	85369010
Country of origin	Germany

Technical data

General

Number of levels	1
Number of connections	2
Potentials	1

Feed-through terminal block - UT 4 - 3044102

Technical data

General

Nominal cross section	4 mm²
Color	gray
Insulating material	PA
Flammability rating according to UL 94	V0
Area of application	Railway industry
	Machine building
	Plant engineering
	Process industry
Rated surge voltage	8 kV
Degree of pollution	3
Overvoltage category	III
Insulating material group	I
Maximum power dissipation for nominal condition	1.02 W
Maximum load current	41 A (with 6 mm² conductor cross section)
Nominal current I_N	32 A (with 4 mm² conductor cross section)
Nominal voltage U_N	1000 V
Open side panel	Yes
Shock protection test specification	DIN EN 50274 (VDE 0660-514):2002-11
Back of the hand protection	guaranteed
Finger protection	guaranteed
Result of surge voltage test	Test passed
Surge voltage test setpoint	9.8 kV
Result of power-frequency withstand voltage test	Test passed
Power frequency withstand voltage setpoint	2.2 kV
Result of the test for mechanical stability of terminal points (5 x conductor connection)	Test passed
Result of bending test	Test passed
Bending test rotation speed	10 rpm
Bending test turns	135
Bending test conductor cross section/weight	0.14 mm² / 0.2 kg
	4 mm² / 0.9 kg
	6 mm^2 / 1.4 kg
Tensile test result	Test passed
Conductor cross section tensile test	0.14 mm²
Tractive force setpoint	10 N
Conductor cross section tensile test	4 mm²
Tractive force setpoint	60 N

Feed-through terminal block - UT 4 - 3044102

Technical data

General

Conductor cross section tensile test	6 mm²
Tractive force setpoint	80 N
Result of tight fit on support	Test passed
Tight fit on carrier	NS 35
Setpoint	1 N
Result of voltage-drop test	Test passed
Requirements, voltage drop	≤ 3.2 mV
Result of temperature-rise test	Test passed
Short circuit stability result	Test passed
Conductor cross section short circuit testing	4 mm²
Short-time current	0.48 kA
Conductor cross section short circuit testing	6 mm²
Short-time current	0.72 kA
Result of thermal test	Test passed
Proof of thermal characteristics (needle flame) effective duration	30 s
Oscillation, broadband noise test result	Test passed
Test specification, oscillation, broadband noise	DIN EN 50155 (VDE 0115-200):2008-03
Test spectrum	Service life test category 1, class B, body mounted
Test frequency	f_1 = 5 Hz to f_2 = 150 Hz
ASD level	1.857 $(m/s^2)^2$/Hz
Acceleration	0,8 g
Test duration per axis	5 h
Test directions	X-, Y- and Z-axis
Shock test result	Test passed
Test specification, shock test	DIN EN 50155 (VDE 0115-200):2008-03
Shock form	Half-sine
Acceleration	5 g
Shock duration	30 ms
Number of shocks per direction	3
Test directions	X-, Y- and Z-axis (pos. and neg.)
Relative insulation material temperature index (Elec., UL 746 B)	130 °C
Temperature index of insulation material (DIN EN 60216-1 (VDE 0304-21))	125 °C
Static insulating material application in cold	-60 °C
Behavior in fire for rail vehicles (DIN 5510-2)	Test passed
Flame test method (DIN EN 60695-11-10)	V0
Oxygen index (DIN EN ISO 4589-2)	>32 %
NF F16-101, NF F10-102 Class I	2

Feed-through terminal block - UT 4 - 3044102

Technical data

General

NF F16-101, NF F10-102 Class F	2
Surface flammability NFPA 130 (ASTM E 162)	passed
Specific optical density of smoke NFPA 130 (ASTM E 662)	passed
Smoke gas toxicity NFPA 130 (SMP 800C)	passed
Calorimetric heat release NFPA 130 (ASTM E 1354)	27,5 MJ/kg
Fire protection for rail vehicles (DIN EN 45545-2) R22	HL 1 - HL 3
Fire protection for rail vehicles (DIN EN 45545-2) R23	HL 1 - HL 3
Fire protection for rail vehicles (DIN EN 45545-2) R24	HL 1 - HL 3
Fire protection for rail vehicles (DIN EN 45545-2) R26	HL 1 - HL 3

Dimensions

Width	6.2 mm
End cover width	2.2 mm
Length	47.7 mm
Height	46.9 mm
Height NS 35/7,5	47.5 mm
Height NS 35/15	55 mm

Connection data

Connection method	Screw connection
Connection in acc. with standard	IEC 60947-7-1
Note	Note: Product releases, connection cross sections and notes on connecting aluminum cables can be found in the download area.
Conductor cross section solid min.	0.14 mm²
Conductor cross section solid max.	6 mm²
Conductor cross section AWG min.	26
Conductor cross section AWG max.	10
Conductor cross section flexible min.	0.14 mm²
Conductor cross section flexible max.	6 mm²
Min. AWG conductor cross section, flexible	26
Max. AWG conductor cross section, flexible	10
Conductor cross section flexible, with ferrule without plastic sleeve min.	0.14 mm²
Conductor cross section flexible, with ferrule without plastic sleeve max.	4 mm²
Conductor cross section flexible, with ferrule with plastic sleeve min.	0.14 mm²
Conductor cross section flexible, with ferrule with plastic sleeve max.	4 mm²
2 conductors with same cross section, solid min.	0.14 mm²
2 conductors with same cross section, solid max.	1.5 mm²
2 conductors with same cross section, stranded min.	0.14 mm²
2 conductors with same cross section, stranded max.	1.5 mm²

Feed-through terminal block - UT 4 - 3044102

Technical data

Connection data

2 conductors with same cross section, stranded, TWIN ferrules with plastic sleeve, min.	0.5 mm²
2 conductors with same cross section, stranded, TWIN ferrules with plastic sleeve, max.	2.5 mm²
2 conductors with same cross section, stranded, ferrules without plastic sleeve, min.	0.14 mm²
2 conductors with same cross section, stranded, ferrules without plastic sleeve, max.	1.5 mm²
Connection in acc. with standard	IEC/EN 60079-7
Conductor cross section solid min.	0.14 mm²
Conductor cross section solid max.	6 mm²
Conductor cross section AWG min.	26
Conductor cross section AWG max.	10
Conductor cross section flexible min.	0.14 mm²
Conductor cross section flexible max.	4 mm²
Stripping length	9 mm
Internal cylindrical gage	A4
Screw thread	M3
Tightening torque, min	0.6 Nm
Tightening torque max	0.8 Nm

Standards and Regulations

Connection in acc. with standard	CSA
	IEC 60947-7-1
Flammability rating according to UL 94	V0
Fire protection for rail vehicles (DIN EN 45545-2) R22	HL 1 - HL 3
Fire protection for rail vehicles (DIN EN 45545-2) R23	HL 1 - HL 3
Fire protection for rail vehicles (DIN EN 45545-2) R24	HL 1 - HL 3
Fire protection for rail vehicles (DIN EN 45545-2) R26	HL 1 - HL 3

Environmental Product Compliance

REACh SVHC	Lead 7439-92-1
China RoHS	Environmentally Friendly Use Period = 50
	For details about hazardous substances go to tab “Downloads”, Category “Manufacturer's declaration”

Drawings

Feed-through terminal block - UT 4 - 3044102

Circuit diagram

Classifications

eCl@ss

eCl@ss 4.0	27141120
eCl@ss 4.1	27141120
eCl@ss 5.0	27141120
eCl@ss 5.1	27141100
eCl@ss 6.0	27141100
eCl@ss 7.0	27141120
eCl@ss 8.0	27141120
eCl@ss 9.0	27141120

ETIM

ETIM 2.0	EC000897
ETIM 3.0	EC000897
ETIM 4.0	EC000897
ETIM 5.0	EC000897
ETIM 6.0	EC000897

UNSPSC

UNSPSC 6.01	30211811
UNSPSC 7.0901	39121410
UNSPSC 11	39121410
UNSPSC 12.01	39121410
UNSPSC 13.2	39121410

Approvals

Approvals

Approvals

DNV GL / CSA / PRS / LR / UL Recognized / cUL Recognized / IECEE CB Scheme / VDE Gutachten mit Fertigungsüberwachung / EAC / EAC / cULus Recognized

Ex Approvals

IECEx / ATEX / UL Recognized / cUL Recognized / EAC Ex / cULus Recognized

Feed-through terminal block - UT 4 - 3044102

Approvals

Approval details

DNV GL	http://exchange.dnv.com/tari/	TAE00001S9

CSA	http://www.csagroup.org/services-industries/product-listing/	13631

	B	C
Nominal voltage UN	600 V	600 V
Nominal current IN	30 A	30 A
mm²/AWG/kcmil	26-10	26-10

PRS	http://www.prs.pl/	TE/2156/880590/17

LR	http://www.lr.org/en	05/20042

UL Recognized	http://database.ul.com/cgi-bin/XYV/template/LISEXT/1FRAME/index.htm	FILE E 60425

	B	C
Nominal voltage UN	600 V	600 V
Nominal current IN	30 A	30 A
mm²/AWG/kcmil	26-10	26-10

cUL Recognized	http://database.ul.com/cgi-bin/XYV/template/LISEXT/1FRAME/index.htm	FILE E 60425

	B	C
Nominal voltage UN	600 V	600 V
Nominal current IN	30 A	30 A
mm²/AWG/kcmil	26-10	26-10

Feed-through terminal block - UT 4 - 3044102

Approvals

IECEE CB Scheme		http://www.iecee.org/	DE1-60117

Nominal voltage UN	800 V
mm²/AWG/kcmil	0.2-4

VDE Gutachten mit Fertigungsüberwachung		http://www2.vde.com/de/Institut/Online-Service/VDE-gepruefteProdukte/Seiten/Online-Suche.aspx	40013658

Nominal voltage UN	800 V
Nominal current IN	32 A
mm²/AWG/kcmil	0.2-4

EAC		EAC-Zulassung

EAC		RU C-DE.A*30.B.01742

cULus Recognized	

Phoenix Contact 2019 © - all rights reserved
http://www.phoenixcontact.com

ITEM 201B

https://www.phoenixcontact.com/us/products/3044128

Ground modular terminal block - UT 4-PE - 3044128

Please be informed that the data shown in this PDF Document is generated from our Online Catalog. Please find the complete data in the user's documentation. Our General Terms of Use for Downloads are valid
(http://phoenixcontact.com/download)

Ground modular terminal block, connection method: Screw connection, number of connections: 2, cross section: 0.14 mm² - 6 mm², AWG: 26 - 10, width: 6.2 mm, height: 46.9 mm, color: green-yellow, mounting type: NS 35/7,5, NS 35/15

Your advantages

- Tested for railway applications

Key Commercial Data

Packing unit	1 pc
GTIN	4 017918 960407
GTIN	4017918960407
Weight per Piece (excluding packing)	13.250 g
Custom tariff number	85369010
Country of origin	Germany

Technical data

General

Number of levels	1
Number of connections	2
Nominal cross section	4 mm²
Color	green-yellow
Insulating material	PA
Flammability rating according to UL 94	V0
Area of application	Railway industry
	Machine building
	Plant engineering

Ground modular terminal block - UT 4-PE - 3044128

Technical data

General

	Process industry
Rated surge voltage	8 kV
Degree of pollution	3
Overvoltage category	III
Insulating material group	I
Designation	Level 1 above 1 below 1
Open side panel	Yes
Oscillation, broadband noise test result	Test passed
Test specification, oscillation, broadband noise	DIN EN 50155 (VDE 0115-200):2008-03
Test spectrum	Service life test category 1, class B, body mounted
Test frequency	f_1 = 5 Hz to f_2 = 150 Hz
ASD level	1.857 $(m/s^2)^2$/Hz
Acceleration	0,8 g
Test duration per axis	5 h
Test directions	X-, Y- and Z-axis
Shock test result	Test passed
Test specification, shock test	DIN EN 50155 (VDE 0115-200):2008-03
Shock form	Half-sine
Acceleration	5g
Shock duration	30 ms
Number of shocks per direction	3
Test directions	X-, Y- and Z-axis (pos. and neg.)
Relative insulation material temperature index (Elec., UL 746 B)	130 °C
Temperature index of insulation material (DIN EN 60216-1 (VDE 0304-21))	125 °C
Static insulating material application in cold	-60 °C
Behavior in fire for rail vehicles (DIN 5510-2)	Test passed
Flame test method (DIN EN 60695-11-10)	V0
Oxygen index (DIN EN ISO 4589-2)	>32 %
NF F16-101, NF F10-102 Class I	2
NF F16-101, NF F10-102 Class F	2
Surface flammability NFPA 130 (ASTM E 162)	passed
Specific optical density of smoke NFPA 130 (ASTM E 662)	passed
Smoke gas toxicity NFPA 130 (SMP 800C)	passed
Calorimetric heat release NFPA 130 (ASTM E 1354)	27,5 MJ/kg
Fire protection for rail vehicles (DIN EN 45545-2) R22	HL 1 - HL 3
Fire protection for rail vehicles (DIN EN 45545-2) R23	HL 1 - HL 3
Fire protection for rail vehicles (DIN EN 45545-2) R24	HL 1 - HL 3

Ground modular terminal block - UT 4-PE - 3044128

Technical data

General

Fire protection for rail vehicles (DIN EN 45545-2) R26	HL 1 - HL 3

Dimensions

Width	6.2 mm
End cover width	2.2 mm
Length	47.7 mm
Height	46.9 mm
Height NS 35/7,5	47.5 mm
Height NS 35/15	55 mm

Connection data

Note	Please observe the current carrying capacity of the DIN rails.
Connection method	Screw connection
Screw thread	M3
Stripping length	9 mm
Tightening torque, min	0.6 Nm
Tightening torque max	0.8 Nm
Connection in acc. with standard	IEC 60947-7-2
Note	Note: Product releases, connection cross sections and notes on connecting aluminum cables can be found in the download area.
Conductor cross section solid min.	0.14 mm²
Conductor cross section solid max.	6 mm²
Conductor cross section AWG min.	26
Conductor cross section AWG max.	10
Conductor cross section flexible min.	0.14 mm²
Conductor cross section flexible max.	6 mm²
Min. AWG conductor cross section, flexible	26
Max. AWG conductor cross section, flexible	10
Conductor cross section flexible, with ferrule without plastic sleeve min.	0.25 mm²
Conductor cross section flexible, with ferrule without plastic sleeve max.	4 mm²
Conductor cross section flexible, with ferrule with plastic sleeve min.	0.25 mm²
Conductor cross section flexible, with ferrule with plastic sleeve max.	4 mm²
2 conductors with same cross section, solid min.	0.14 mm²
2 conductors with same cross section, solid max.	1.5 mm²
2 conductors with same cross section, stranded min.	0.14 mm²
2 conductors with same cross section, stranded max.	1.5 mm²
2 conductors with same cross section, stranded, TWIN ferrules with plastic sleeve, min.	0.5 mm²

Ground modular terminal block - UT 4-PE - 3044128

Technical data

Connection data

2 conductors with same cross section, stranded, TWIN ferrules with plastic sleeve, max.	2.5 mm²
2 conductors with same cross section, stranded, ferrules without plastic sleeve, min.	0.14 mm²
2 conductors with same cross section, stranded, ferrules without plastic sleeve, max.	1.5 mm²
Connection in acc. with standard	IEC/EN 60079-7
Conductor cross section solid min.	0.14 mm²
Conductor cross section solid max.	6 mm²
Conductor cross section AWG min.	26
Conductor cross section AWG max.	10
Conductor cross section flexible min.	0.14 mm²
Conductor cross section flexible max.	4 mm²
Internal cylindrical gage	A4

Standards and Regulations

Connection in acc. with standard	CSA
	IEC 60947-7-2
Flammability rating according to UL 94	V0
Fire protection for rail vehicles (DIN EN 45545-2) R22	HL 1 - HL 3
Fire protection for rail vehicles (DIN EN 45545-2) R23	HL 1 - HL 3
Fire protection for rail vehicles (DIN EN 45545-2) R24	HL 1 - HL 3
Fire protection for rail vehicles (DIN EN 45545-2) R26	HL 1 - HL 3

Environmental Product Compliance

	Lead 7439-92-1
China RoHS	Environmentally Friendly Use Period = 50
	For details about hazardous substances go to tab “Downloads”, Category “Manufacturer's declaration”

Approvals

Approvals

Approvals

DNV GL / CSA / PRS / LR / UL Recognized / cUL Recognized / IECEE CB Scheme / VDE Gutachten mit Fertigungsüberwachung / EAC / RS / cULus Recognized

Ground modular terminal block - UT 4-PE - 3044128

Approvals

Ex Approvals

IECEx / ATEX / EAC Ex

Approval details

DNV GL	https://approvalfinder.dnvgl.com/	TAE00001S9

CSA	http://www.csagroup.org/services-industries/product-listing/	13631

	B	C
mm²/AWG/kcmil	26-10	26-10

PRS	http://www.prs.pl/	TE/2156/880590/17

LR	http://www.lr.org/en	05/20042

UL Recognized	http://database.ul.com/cgi-bin/XYV/template/LISEXT/1FRAME/index.htm	FILE E 60425

	B	C	D
mm²/AWG/kcmil	26-10	26-10	26-10

cUL Recognized	http://database.ul.com/cgi-bin/XYV/template/LISEXT/1FRAME/index.htm	FILE E 60425

	B	C	D
mm²/AWG/kcmil	26-10	26-10	26-10

Ground modular terminal block - UT 4-PE - 3044128

Approvals

IECEE CB Scheme		http://www.iecee.org/	DE1-60093

mm²/AWG/kcmil	0.2-4

VDE Gutachten mit Fertigungsüberwachung		http://www2.vde.com/de/Institut/Online-Service/VDE-gepruefteProdukte/Seiten/Online-Suche.aspx	40013715

mm²/AWG/kcmil	0.2-4

EAC			RU C-DE.A*30.B.01742

RS		http://www.rs-head.spb.ru/en/index.php	17.00013.272

cULus Recognized	

Phoenix Contact 2019 © - all rights reserved
http://www.phoenixcontact.com

https://www.phoenixcontact.com/us/products/3047028

End cover - D-UT 2,5/10 - 3047028

Please be informed that the data shown in this PDF Document is generated from our Online Catalog. Please find the complete data in the user's documentation. Our General Terms of Use for Downloads are valid
(http://phoenixcontact.com/download)

End cover, length: 47 mm, width: 2.2 mm, height: 39.8 mm, color: gray

RoHS

Key Commercial Data

Packing unit	1 pc
Minimum order quantity	50 pc
GTIN	4 017918 960346
GTIN	4017918960346
Weight per Piece (excluding packing)	2.600 g
Custom tariff number	85389099
Country of origin	Germany

Technical data

General

Color	gray
Material	PA
Flammability rating according to UL 94	V0

Dimensions

Width	2.2 mm
Length	47 mm
Height	39.8 mm

General

Relative insulation material temperature index (Elec., UL 746 B)	130 °C

End cover - D-UT 2,5/10 - 3047028

Technical data

General

Temperature index of insulation material (DIN EN 60216-1 (VDE 0304-21))	125 °C
Static insulating material application in cold	-60 °C
Behavior in fire for rail vehicles (DIN 5510-2)	Test passed
Flame test method (DIN EN 60695-11-10)	V0
Oxygen index (DIN EN ISO 4589-2)	>32 %
NF F16-101, NF F10-102 Class I	2
NF F16-101, NF F10-102 Class F	2
Surface flammability NFPA 130 (ASTM E 162)	passed
Specific optical density of smoke NFPA 130 (ASTM E 662)	passed
Smoke gas toxicity NFPA 130 (SMP 800C)	passed
Calorimetric heat release NFPA 130 (ASTM E 1354)	27,5 MJ/kg
Fire protection for rail vehicles (DIN EN 45545-2) R22	HL 1 - HL 3
Fire protection for rail vehicles (DIN EN 45545-2) R23	HL 1 - HL 3
Fire protection for rail vehicles (DIN EN 45545-2) R24	HL 1 - HL 3
Fire protection for rail vehicles (DIN EN 45545-2) R26	HL 1 - HL 3

Standards and Regulations

Flammability rating according to UL 94	V0
Fire protection for rail vehicles (DIN EN 45545-2) R22	HL 1 - HL 3
Fire protection for rail vehicles (DIN EN 45545-2) R23	HL 1 - HL 3
Fire protection for rail vehicles (DIN EN 45545-2) R24	HL 1 - HL 3
Fire protection for rail vehicles (DIN EN 45545-2) R26	HL 1 - HL 3

Environmental Product Compliance

China RoHS	Environmentally friendly use period: unlimited = EFUP-e
	No hazardous substances above threshold values

Classifications

eCl@ss

eCl@ss 4.0	27141111
eCl@ss 4.1	27141111
eCl@ss 5.0	27141133
eCl@ss 5.1	27141100
eCl@ss 6.0	27141100
eCl@ss 7.0	27141133
eCl@ss 8.0	27141133
eCl@ss 9.0	27141133

End cover - D-UT 2,5/10 - 3047028

Classifications

ETIM

ETIM 2.0	EC000886
ETIM 3.0	EC000886
ETIM 4.0	EC000886
ETIM 5.0	EC000886
ETIM 6.0	EC000886

UNSPSC

UNSPSC 6.01	30211827
UNSPSC 7.0901	39121424
UNSPSC 11	39121424
UNSPSC 12.01	39121424
UNSPSC 13.2	39121425

Phoenix Contact 2019 © - all rights reserved
http://www.phoenixcontact.com

ITEM 203A

https://www.phoenixcontact.com/us/products/0800886

End clamp - E/NS 35 N - 0800886

Please be informed that the data shown in this PDF Document is generated from our Online Catalog. Please find the complete data in the user's documentation. Our General Terms of Use for Downloads are valid
(http://phoenixcontact.com/download)

End clamp, width: 9.5 mm, color: gray

Your advantages

- Large-surface labeling

RoHS

Key Commercial Data

Packing unit	1 pc
Minimum order quantity	50 pc
GTIN	4 017918 129309
GTIN	4017918129309
Weight per Piece (excluding packing)	14.790 g
Custom tariff number	39269097
Country of origin	Germany

Technical data

Dimensions

Height	32.8 mm
Length	48.6 mm
Width	9.5 mm

General

Material	PA
Color	gray

Standards and Regulations

End clamp - E/NS 35 N - 0800886

Technical data

Standards and Regulations

Flammability rating according to UL 94	V0

Environmental Product Compliance

China RoHS	Environmentally friendly use period: unlimited = EFUP-e
	No hazardous substances above threshold values

Drawings

Dimensional drawing

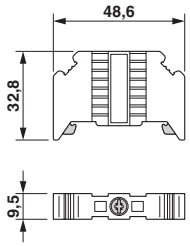

Classifications

eCl@ss

eCl@ss 4.0	27141199
eCl@ss 4.1	27141199
eCl@ss 5.0	27141135
eCl@ss 5.1	27141100
eCl@ss 6.0	27141100
eCl@ss 7.0	27141135
eCl@ss 8.0	27141135
eCl@ss 9.0	27141135

ETIM

ETIM 2.0	EC000761
ETIM 3.0	EC001041
ETIM 4.0	EC001041
ETIM 5.0	EC001041
ETIM 6.0	EC001041

UNSPSC

UNSPSC 6.01	30212109
UNSPSC 7.0901	39121708

End clamp - E/NS 35 N - 0800886

Classifications

UNSPSC

UNSPSC 11	39121708
UNSPSC 12.01	39121708
UNSPSC 13.2	39121425

Phoenix Contact 2019 © - all rights reserved
http://www.phoenixcontact.com

https://www.phoenixcontact.com/us/products/3030365

Plug-in bridge - FBS 20-6 - 3030365

Please be informed that the data shown in this PDF Document is generated from our Online Catalog. Please find the complete data in the user's documentation. Our General Terms of Use for Downloads are valid
(http://phoenixcontact.com/download)

Plug-in bridge, pitch: 6.2 mm, width: 122.3 mm, number of positions: 20, color: red

Your advantages

- The 2- to 50-pos. jumpers can bridge up to 50 terminal blocks in the two bridge shafts of the CLIPLINE complete system in one step

RoHS

Key Commercial Data

Packing unit	1 pc
Minimum order quantity	10 pc
GTIN	4 017918 188597
GTIN	4017918188597
Weight per Piece (excluding packing)	20.160 g
Custom tariff number	85366990
Country of origin	Germany

Technical data

Technical data

Color	red
Material	Copper
Number of positions	20
Pitch	6.2 mm
Height	23 mm
Width	122.3 mm
Flammability rating according to UL 94	V0

Plug-in bridge - FBS 20-6 - 3030365

Technical data

Technical data

Maximum load current	32 A (The current values for the jumpers can deviate when used in different modular terminal blocks. The precise values can be found in the accessories data for the respective modular terminal blocks.)

Standards and Regulations

Flammability rating according to UL 94	V0

Environmental Product Compliance

China RoHS	Environmentally friendly use period: unlimited = EFUP-e
	No hazardous substances above threshold values

Classifications

eCl@ss

eCl@ss 4.0	27141199
eCl@ss 4.1	27141199
eCl@ss 5.0	27141140
eCl@ss 5.1	27141100
eCl@ss 6.0	27141100
eCl@ss 7.0	27141140
eCl@ss 8.0	27141140
eCl@ss 9.0	27141140

ETIM

ETIM 2.0	EC000489
ETIM 3.0	EC000489
ETIM 4.0	EC000489
ETIM 5.0	EC000489
ETIM 6.0	EC000489

UNSPSC

UNSPSC 6.01	30211829
UNSPSC 7.0901	39121426
UNSPSC 11	39121426
UNSPSC 12.01	39121426
UNSPSC 13.2	39121426

Approvals

Approvals

Plug-in bridge - FBS 20-6 - 3030365

Approvals

Approvals

EAC / EAC

Ex Approvals

Approval details

EAC	EAC	EAC-Zulassung
EAC	EAC	RU C-DE.A*30.B.01742

Phoenix Contact 2019 © - all rights reserved
http://www.phoenixcontact.com

Bulletin 1492

IEC Terminal Blocks

Fuse Blocks

	1492-WFB4			1492-WFB424			1492-WFB4250		
Dimensions are not intended to be used for manufacturing purposes. **Note:** Height dimension is measured from top of rail to top of terminal block.	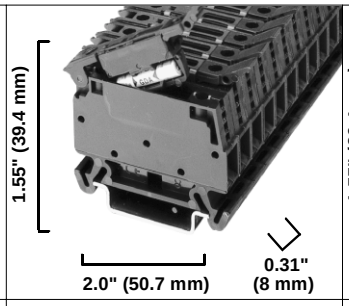			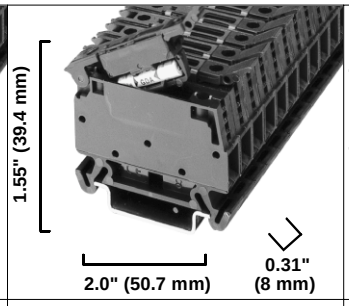			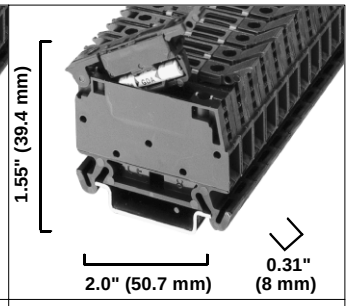		
Specifications	*Single-circuit fuse block.*			*Single-circuit fuse block with LED blown fuse indicator.*			*Single-circuit fuse block with neon blown fuse indicator.*		
Approvals	UL	CSA	IEC	UL	CSA	IEC	UL	CSA	IEC
Voltage Rating	300V AC/DC	300V AC/DC	500V AC/DC	300V AC/DC	300V AC/DC	500V AC/DC	300V AC/DC	300V AC/DC	500V AC/DC
Maximum Current	15 A	15 A	15 A ❶	15 A	15 A	15 A ❶	15 A	15 A	15 A ❶
Wire Range (Rated Cross Section)	#22…#12 AWG	#22…#12 AWG	0.5…4 mm^2	#22…#12 AWG	#22…#12 AWG	0.5…4 mm^2	#22…#12 AWG	#22…#12 AWG	0.5…4 mm^2
Indicator Type	Non-Indicating			LED			Neon		
Leakage Current	—			2mA @ 24V			1mA @ 264V		
Working Voltage	Per Fuse Rating			10-57V AC/DC			85-264V AC		
Fuse Size (Not Supplied)	5 x 20 mm			5 x 20 mm			5 x 20 mm		
Wire Strip Length	0.31" (8 mm)			0.31" (8 mm)			0.31" (8 mm)		
Recommended Tightening Torque	5.0…5.6 lb-in. (0.6 Nm)			5.0…5.6 lb-in. (0.6 Nm)			5.0…5.6 lb-in. (0.6 Nm)		
Density	38 pcs./ft (125/m)			38 pcs./ft (125/m)			38 pcs./ft (125/m)		
Insulation Temperature Range	–40…+195°F (–40…+90°C)			–40…+195°F (–40…+90°C)			–40…+195°F (–40…+90°C)		
Terminal Blocks	**Cat. No.**		**Pcs./ Pkg.**	**Cat. No.**		**Pcs./ Pkg.**	**Cat. No.**		**Pcs./ Pkg.**
Terminal Block	1492-WFB4		50	1492-WFB424		50	1492-WFB4250		50
Accessories (page 12-172)	**Cat. No.**		**Pcs./ Pkg.**	**Cat. No.**		**Pcs./ Pkg.**	**Cat. No.**		**Pcs./ Pkg.**
Mounting Rails: 1 m Symmetrical DIN (Steel)	199-DR1		5	199-DR1		5	199-DR1		5
1 m Symmetrical DIN (Aluminum)	1492-DR5		5	1492-DR5		5	1492-DR5		5
1 m Hi-Rise Sym. DIN (Aluminum)	1492-DR6		2	1492-DR6		2	1492-DR6		2
1 m Angled Hi-Rise Sym. DIN (Steel)	1492-DR7		2	1492-DR7		2	1492-DR7		2
End Barrier	Not Required		—	Not Required		—	Not Required		—
End Anchors: DIN Rail — Normal Duty	1492-EA35		50	1492-EA35		50	1492-EA35		50
DIN Rail — Heavy Duty	1492-EAH35		10	1492-EAH35		10	1492-EAH35		10
Jumpers: Side Jumper — 10-pole Insulated	1492-SJFB8-10		10	1492-SJFB8-10		10	1492-SJFB8-10		10
Other Accessories: Partition Plate	1492-PPSL3		50	1492-PPSL3		50	1492-PPSL3		50
Group Marking Carrier	1492-GM35		10	1492-GM35		10	1492-GM35		10
Marking Systems: Snap-in Marker Card — For Base Block	1492-SM8X12		5	1492-SM8X12		5	1492-SM8X12		5
For Handle	1492-SM6X9		5	1492-SM6X9		5	1492-SM6X9		5
Individual Marker Tabs (single char.)	1492-MP ❷		10	1492-MP ❷		10	1492-MP ❷		10

❶ IEC standards for 5 x 20 mm fuses do not include ratings above 6.3 A.
❷ Cat. no. is not complete. See page 12-173.

Accessories — Page 12-172

Littelfuse®
Expertise Applied | Answers Delivered

217 Series, 5 × 20 mm, Fast-acting Fuse

ITEMS 220A, B, H

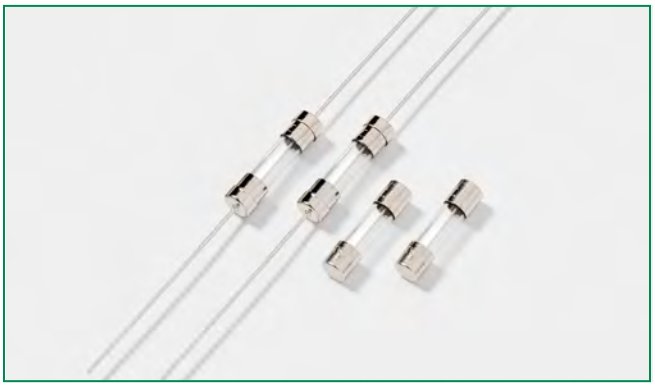

Description

5×20mm fast-acting glass body cartridge fuse designed to IEC specification.

Features

- Designed to International (IEC) Standards for use globally
- Meets the IEC 60127-2, Sheet 2 specification for fast-acting fuses
- Available in cartridge and axial lead form
- RoHS compliant and lead-free

Applications

Used as supplementary protection in appliance or utilization equipment to provide individual protection for components or internal circuits.

Agency Approvals

Agency	Agency File Number	Ampere Range
	Cartridge: NBK090205-E10480A NBK120802-E10480C Leaded: NBK090205-E10480B NBK120802-E10480D	 1A – 5A 6.3A – 15A 1A – 5A 6.3A – 15A
	2002010207007600	0.032A – 6.3A
	SU05001-3004 SU05001-2005 SU05001-2006 SU05001-2007	0.032A – 40mA 50mA – 0.0315A 0.0400A – 6.3A 8A & 10A
	E10480	0.032A – 10A
	29862	0.032A – 6.3A
	1517221	0.032A – 6.3A
	40014645	0.032A – 6.3A, 8A*, 10A*
	40016647	15A*
	KM41462	0.0400A – 6.3A
	N/A	0.032A – 15A

*Approval for cartridge versions only

Electrical Characteristics for Series

% of Ampere Rating	Ampere Rating	Opening Time
150%	0.032A–0.0100A	60 minutes, Minimum
	0.0125A-6.3A	60 minutes, Minimum
	8A-15A	30 minutes, Minimum
210%	0.032A-0.0100A	30 minutes, Maximum
	0.0125A-6.3A	30 minutes, Maximum
	8A-15A	30 minutes, Maximum
275%	0.032A-0.0100A	0.01 sec., Min.; .5 sec. Max.
	0.0125A-6.3A	0.05 sec., Min.; 2 sec. Max.
	8A-15A	0.05 sec., Min.; 2 sec. Max.
400%	0.032A-0.0100A	.003 sec., Min.; 0.1 sec.. Max.
	0.0125A-6.3A	.01 sec., Min.; 0.3 sec. Max.
	8A-15A	.01 sec., Min.; 0.4 sec. Max.
1000%	0.032A-0.0100A	.02 second, Maximum
	0.0125A-6.3A	.02 second, Maximum
	8A-15A	.04 second, Maximum

Additional Information

Datasheet | Resources | Samples | Accessories

For recommended fuse accessories for this product series, see 'Recommended Accessories' section.

© 2017 Littelfuse, Inc.
Specifications are subject to change without notice. Application testing is strongly recommended.
Revised: 05/08/17

ITEMS 220A, B, H

Electrical Characteristic Specifications by Item

Amp Code	Amp Rating (A)	Voltage Rating (V)	Interrupting Rating	Nominal Cold Resistance (Ohms)	Nominal Melting I^2t (A^2 sec)	Maximum Voltage Drop at Rated Current (mV)	Maximum Power Dissipation At 1.5In(W)	Agency Approvals								
.032	0.032	250	35A @ 250VAC	262.2000	0.00015	10000	1.6		x	x		x	x	x	x	x
.040	0.04	250		183.1500	0.00008	8000	1.6		x	x		x	x	x	x	x
.050	0.05	250		15.2000	0.00049	7000	1.6		x	x		x	x	x	x	x
.063	0.063	250		10.4500	0.00056	5000	1.6		x	x		x	x	x	x	x
.080	0.08	250		7.8900	0.00132	4000	1.6		x	x		x	x	x	x	x
.100	0.1	250		5.6965	0.00260	3500	1.6		x	x		x	x	x	x	x
.125	0.125	250		3.8200	0.00478	2000	1.6		x	x		x	x	x	x	x
.160	0.16	250		2.5250	0.01000	2000	1.6		x	x		x	x	x	x	x
.200	0.2	250		1.7000	0.02000	1700	1.6		x	x		x	x	x	x	x
.250	0.25	250		1.2325	0.04000	1400	1.6		x	x		x	x	x	x	x
.315	0.315	250		0.8800	0.11000	1300	1.6		x	x		x	x	x	x	x
.400	0.4	250		0.2770	0.12500	1200	1.6	x	x	x		x	x	x	x	x
.500	0.5	250		0.2065	0.21500	1000	1.6	x	x	x		x	x	x	x	x
.630	0.63	250		0.1900	0.41000	650	1.6	x	x	x		x	x	x	x	x
.800	0.8	250		0.1203	0.85000	240	1.6	x	x	x		x	x	x	x	x
001.	1	250		0.0964	1.04500	200	1.6	x	x	x	x	x	x	x	x	x
1.25	1.25	250		0.0701	2.23000	200	1.6	x	x	x	x	x	x	x	x	x
01.6	1.6	250		0.0528	4.61500	190	1.6	x	x	x	x	x	x	x	x	x
002.	2	250		0.0416	5.73000	170	1.6	x	x	x	x	x	x	x	x	x
02.5	2.5	250		0.0334	9.46000	170	1.6	x	x	x	x	x	x	x	x	x
3.15	3.15	250		0.0224	17.72000	150	2.5	x	x	x	x	x	x	x	x	x
004.	4	250	40A @ 250VAC	0.0165	29.16500	130	2.5	x	x	x	x	x	x	x	x	x
005.	5	250	50A @ 250VAC	0.0137	42.79500	130	2.5	x	x	x	x	x	x	x	x	x
06.3	6.3	250	63A @ 250VAC	0.0095	62.46500	130	2.5	x	x	x	x	x	x	x	x	x
008.	8	250	80A @ 250VAC	0.0068	198.16000	130	4		x		x	x			x	x*
010.	10	250	100A @ 250VAC	0.0063	217.63500	130	4		x		x	x			x	x*
015.	15	250	150A @ 250VAC	0.0040	607.13500	130	4				x				x	x*

* Approval for cartidge versions only.

Temperature Re-rating Curve

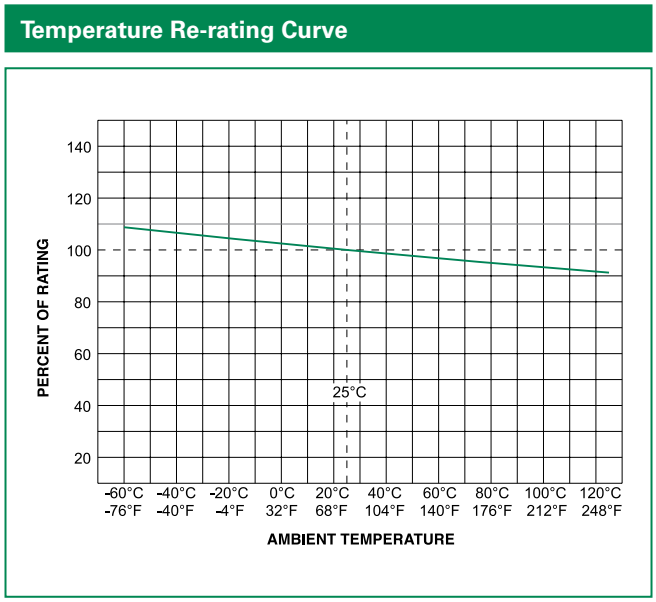

Average Time Current Curves

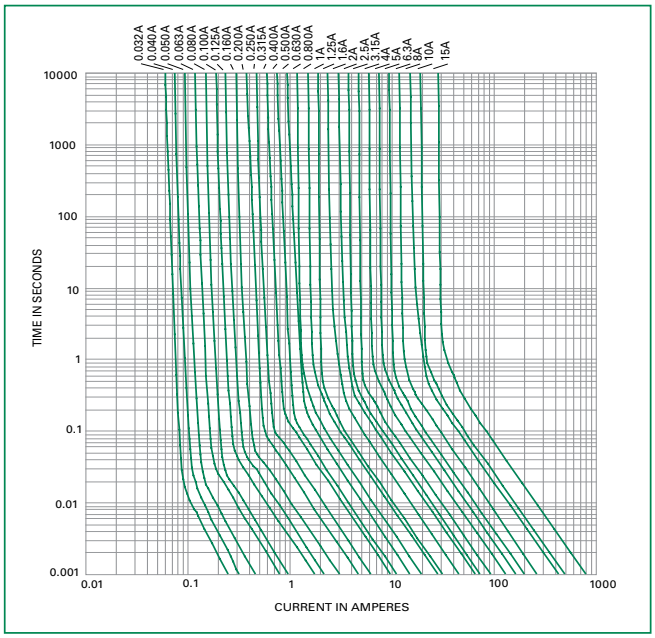

© 2017 Littelfuse, Inc.
Specifications are subject to change without notice.
Revised: 05/08/17

Littelfuse®
Expertise Applied | Answers Delivered

ITEMS 220A, B, H

Soldering Parameters - Wave Soldering

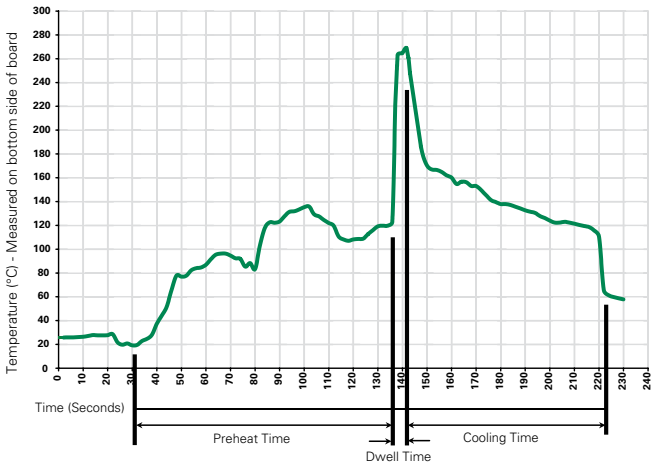

Recommended Process Parameters:

Wave Parameter	Lead-Free Recommendation
Preheat: (Depends on Flux Activation Temperature)	(Typical Industry Recommendation)
Temperature Minimum:	100°C
Temperature Maximum:	150°C
Preheat Time:	60-180 seconds
Solder Pot Temperature:	260°C Maximum
Solder Dwell Time:	2-5 seconds

Recommended Hand-Solder Parameters:

Solder Iron Temperature: 350°C +/- 5°C
Heating Time: 5 seconds max.

Note: These devices are not recommended for IR or Convection Reflow process.

Product Characteristics

Material	Body: Glass Cap: Nickel–plated brass Leads: Tin–plated Copper
Terminal Strength	MIL-STD-202, Method 211, Test Condition A
Solderability	MIL-STD-202 method 208
Product Marking	Cap1: Brand logo, current and voltage ratings Cap2: Agency approval marks
Packaging	Available in Bulk (M=1000 pcs/pkg) or on Tape/Reel (MRET1=1000 pcs/reel)

Operating Temperature	–55°C to +125°C
Thermal Shock	MIL-STD-202, Method 107, Test Condition B: (5 cycles –65°C to +125°C)
Vibration	MIL-STD-202, Method 201
Humidity	MIL-STD-202, Method 103, Test Condition A. high RH (95%) and elevated temperature (40°C) for 240 hours.
Salt Spray	MIL-STD-202, Method 101, Test Condition B

© 2017 Littelfuse, Inc.
Specifications are subject to change without notice.
Revised: 05/08/17

ITEMS 220A, B, H

Dimensions

0217 000P

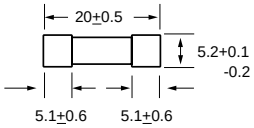

0217.032 **XEP**
to
0217.315 **XEP**

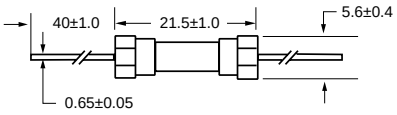

0217.400 **XEP**
to
0217015 **XEP**

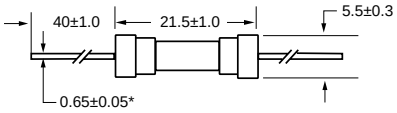

All dimensions in mm

Notes:
* Ratings above 6.3A have 0.8±0.05 diameter lead.

Part Numbering System

0217 xxxx M X E P

Series

Amp Code
Refer to Amp Code column of Electrical Characteristics Table

Quantity Code
M = 1000

Packaging Code
X = Filler

Option Codes
Blank = Cartridge Type Fuse
E = Axial Leaded Fuse

Lead-free

Packaging

Packaging Option	Packaging Specification	Quantity	Quantity & Packaging Code	Taping Width
217 Series				
Bulk	N/A	1000	MX	N/A
Bulk	N/A	1000	MXE	N/A
Reel and Tape	EIA 296-E	1000	MRET1	T1=53mm (2.087")
Bulk	N/A	1000	MXG	N/A
Bulk	N/A	1000	MXB	N/A
Bulk	N/A	100	HX	N/A

Recommended Accessories

Accessory Type	Series	Description	Max Application Voltage	Max Application Amperage
Holder	345_ISF	Panel Mount Shock-Safe Fuseholder	250	10
	345	Shock-Safe Fuseholder with PC Mount, Solder Mount and Panel Mount options		20
	830	PC Mount Shock-Safe Miniature Fuseholder		16
Block	520	Metric OMNI-BLOK® Fuse Block		10
	646	PC Mount Miniature Fuse Block		6.3
	658	Surface Mount Miniature Fuse Block		10
Clip	520_W	PC Mount Miniature Fuse Clip		6.3
	111	PC Board Mount Fuse Clip		10
	445	PC Board Mount Fuse Clip		10

Notes:
1. Do not use in applications above rating.
2. Please refer to fuseholder data sheet for specific re-rating information.
3. Please contact factory for applications greater than the max voltage and amperage shown.

Disclaimer Notice - Information furnished is believed to be accurate and reliable. However, users should independently evaluate the suitability of and test each product selected for their own applications. Littelfuse products are not designed for, and may not be used in, all applications. Read complete Disclaimer Notice at www.littelfuse.com/disclaimer-electronics.

© 2017 Littelfuse, Inc.
Specifications are subject to change without notice.

https://www.phoenixcontact.com/us/products/2866310

Power supply unit - TRIO-PS/1AC/24DC/ 5 - 2866310

Please be informed that the data shown in this PDF Document is generated from our Online Catalog. Please find the complete data in the user's documentation. Our General Terms of Use for Downloads are valid
(http://phoenixcontact.com/download)

Primary-switched TRIO POWER power supply for DIN rail mounting, input: 1-phase, output: 24 V DC/5 A

Product Description

TRIO POWER power supplies with standard functionality
TRIO POWER is particularly suited to standard machine production, thanks to 1- and 3-phase versions up to 960 W. The wide-range input and the international approval package enable worldwide use.
The robust metal housing, the high electric strength, and the wide temperature range ensure a high level of power supply reliability.

Your advantages

- Use the third negative terminal block as a grounding terminal block and minimize installation costs
- Rugged design with metal housing and wide temperature range from -25 to +70°C
- Maximum operational reliability thanks to high MTBF (mean time between failures) of more than 500,000 hours and high dielectric strength of up to 300 V AC
- Compensation of voltage drops by means of output voltage that can be adjusted on the front

RoHS

Key Commercial Data

Packing unit	1 pc
GTIN	4 046356 046640
GTIN	4046356046640
Weight per Piece (excluding packing)	760.000 g
Custom tariff number	85044030
Country of origin	China

Technical data

Dimensions

Width	40 mm

Power supply unit - TRIO-PS/1AC/24DC/ 5 - 2866310

Technical data

Dimensions

Height	130 mm
Depth	115 mm

Ambient conditions

Degree of protection	IP20
Ambient temperature (operation)	-25 °C ... 70 °C (> 55° C derating : 2.5%/K)
Ambient temperature (storage/transport)	-40 °C ... 85 °C
Max. permissible relative humidity (operation)	≤ 95 % (at 25 °C, non-condensing)
Climatic class	3K3 (in acc. with EN 60721)
Degree of pollution	2

Input data

Nominal input voltage range	100 V AC ... 240 V AC
Input voltage range	85 V AC ... 264 V AC (Derating < 90 V AC: 2,5 %/V)
Dielectric strength maximum	300 V AC
AC frequency range	45 Hz ... 65 Hz
Discharge current to PE	< 3.5 mA
Current consumption	1.65 A (120 V AC)
	0.9 A (230 V AC)
Nominal power consumption	189 VA
Inrush surge current	< 15 A
Mains buffering	> 20 ms (120 V AC)
	> 110 ms (230 V AC)
Input fuse	3.15 A (slow-blow, internal)
Choice of suitable circuit breakers	6 A ... 16 A (Characteristics B, C, D, K)
Power factor (cos phi)	0.72
Type of protection	Transient surge protection
Protective circuit/component	Varistor

Output data

Nominal output voltage	24 V DC ±1 %
Setting range of the output voltage (U_{Set})	22.5 V DC ... 29.5 V DC (> 24 V DC, constant capacity restricted)
Nominal output current (I_N)	5 A (U_{OUT} = 24 V DC)
Derating	55 °C ... 70 °C (2.5%/K)
Connection in parallel	Yes, for redundancy and increased capacity
Connection in series	yes
Feedback resistance	35 V DC
Protection against surge voltage on the output	< 35 V DC
Max. capacitive load	Unlimited

Power supply unit - TRIO-PS/1AC/24DC/ 5 - 2866310

Technical data

Output data

Active current limitation	Approx. 10 A (for short-circuit)
Control deviation	< 1 % (change in load, static 10 % ... 90 %)
	< 2 % (change in load, dynamic 10 % ... 90 %)
	< 0.1 % (change in input voltage ±10 %)
Residual ripple	< 20 mV_{PP}
Output power	120 W
Typical response time	< 1 s
Peak switching voltages nominal load	< 30 mV_{PP}
Maximum power dissipation in no-load condition	1.1 W
Power loss nominal load max.	18 W

General

Net weight	0.6 kg
Operating voltage display	Green LED
Efficiency	89 % (for 230 V AC and nominal values)
Insulation voltage input/output	4 kV AC (type test)
	2 kV AC (routine test)
Insulation voltage input / PE	2 kV AC (type test)
	2 kV AC (routine test)
Insulation voltage output / PE	500 V DC (type test)
Protection class	I (with PE connection)
Degree of protection	IP20
MTBF (IEC 61709, SN 29500)	> 2031000 h
Mounting position	horizontal DIN rail NS 35, EN 60715
Assembly instructions	alignable: horizontally 0 mm, vertically 50 mm

Connection data, input

Connection method	Screw connection
Conductor cross section solid min.	0.2 mm²
Conductor cross section solid max.	2.5 mm²
Conductor cross section flexible min.	0.2 mm²
Conductor cross section flexible max.	2.5 mm²
Conductor cross section AWG min.	24
Conductor cross section AWG max.	14
Stripping length	9 mm
Screw thread	M2,5

Connection data, output

Connection method	Screw connection

Power supply unit - TRIO-PS/1AC/24DC/ 5 - 2866310

Technical data

Connection data, output

Conductor cross section solid min.	0.2 mm²
Conductor cross section solid max.	2.5 mm²
Conductor cross section flexible min.	0.2 mm²
Conductor cross section flexible max.	2.5 mm²
Conductor cross section AWG min.	24
Conductor cross section AWG max.	14
Stripping length	9 mm
Screw thread	M2,5

Signaling

Status display	"DC OK" LED green
Note on status display	U_{OUT} > 21.5 V: LED lights up

Standards and Regulations

Electromagnetic compatibility	Conformance with EMC Directive 2014/30/EU
Noise immunity	EN 61000-6-2:2005
Connection in acc. with standard	CUL
Standards/regulations	EN 61000-4-2
Contact discharge	4 kV (Test Level 2)
Standards/regulations	EN 61000-4-3
Frequency range	80 MHz ... 1 GHz
Test field strength	10 V/m
Frequency range	1.4 GHz ... 2 GHz
Test field strength	3 V/m
Standards/regulations	EN 61000-4-4
Comments	Criterion B
Standards/regulations	EN 61000-6-3
	EN 61000-4-6
Frequency range	0.15 MHz ... 80 MHz
Voltage	10 V (Test Level 3)
Standards/regulations	EN 61000-4-11
Low Voltage Directive	Conformance with LV directive 2006/95/EC
Standard - Electrical safety	EN 60950-1/VDE 0805 (SELV)
Standard – Electronic equipment for use in electrical power installations and their assembly into electrical power installations	EN 50178/VDE 0160 (PELV)
Standard – Safety extra-low voltage	EN 60950-1 (SELV)
	EN 60204 (PELV)
Standard - Safe isolation	DIN VDE 0100-410

Power supply unit - TRIO-PS/1AC/24DC/ 5 - 2866310

Technical data

Standards and Regulations

Standard – Protection against shock currents, basic requirements for protective separation in electrical equipment	EN 50178
Standard – Limitation of mains harmonic currents	EN 61000-3-2
Shipbuilding approval	DNV GL (EMC A)
UL approvals	UL/C-UL listed UL 508
	UL/C-UL Recognized UL 60950-1
Shock	15g in all directions in acc. with IEC 60068-2-27
Vibration (operation)	< 15 Hz, amplitude ±2.5 mm (according to IEC 60068-2-6)
	15 Hz ... 150 Hz, 2.3g, 90 min.

Environmental Product Compliance

China RoHS	Environmentally Friendly Use Period = 25;
	For details about hazardous substances go to tab “Downloads”, Category “Manufacturer's declaration”

Drawings

Dimensional drawing

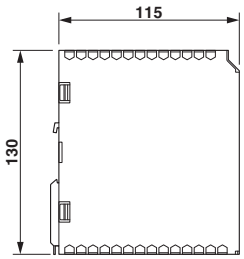

Block diagram

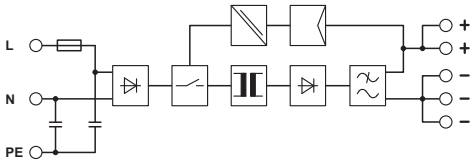

Classifications

eCl@ss

eCl@ss 4.0	27040702
eCl@ss 4.1	27040702
eCl@ss 5.0	27049002
eCl@ss 5.1	27049000
eCl@ss 6.0	27049000
eCl@ss 7.0	27049002
eCl@ss 8.0	27049002
eCl@ss 9.0	27040701

Power supply unit - TRIO-PS/1AC/24DC/ 5 - 2866310

Classifications

ETIM

ETIM 2.0	EC001039
ETIM 3.0	EC001039
ETIM 4.0	EC000599
ETIM 5.0	EC002540
ETIM 6.0	EC002540

UNSPSC

UNSPSC 6.01	30211502
UNSPSC 7.0901	39121004
UNSPSC 11	39121004
UNSPSC 12.01	39121004
UNSPSC 13.2	39121004

Approvals

Approvals

Approvals

DNV GL / UL Listed / UL Recognized / cUL Recognized / cUL Listed / EAC / EAC / cULus Recognized / cULus Listed

Ex Approvals

Approval details

DNV GL		http://exchange.dnv.com/tari/	TAA00001AV
UL Listed		http://database.ul.com/cgi-bin/XYV/template/LISEXT/1FRAME/index.htm	FILE E 123528
UL Recognized		http://database.ul.com/cgi-bin/XYV/template/LISEXT/1FRAME/index.htm	FILE E 211944

Power supply unit - TRIO-PS/1AC/24DC/ 5 - 2866310

Approvals

cUL Recognized		http://database.ul.com/cgi-bin/XYV/template/LISEXT/1FRAME/index.htm	FILE E 211944
cUL Listed		http://database.ul.com/cgi-bin/XYV/template/LISEXT/1FRAME/index.htm	FILE E 123528
EAC			EAC-Zulassung
EAC			RU C-DE.A*30.B.01082
cULus Recognized			
cULus Listed			

Phoenix Contact 2019 © - all rights reserved
http://www.phoenixcontact.com

1489-M Circuit Breakers

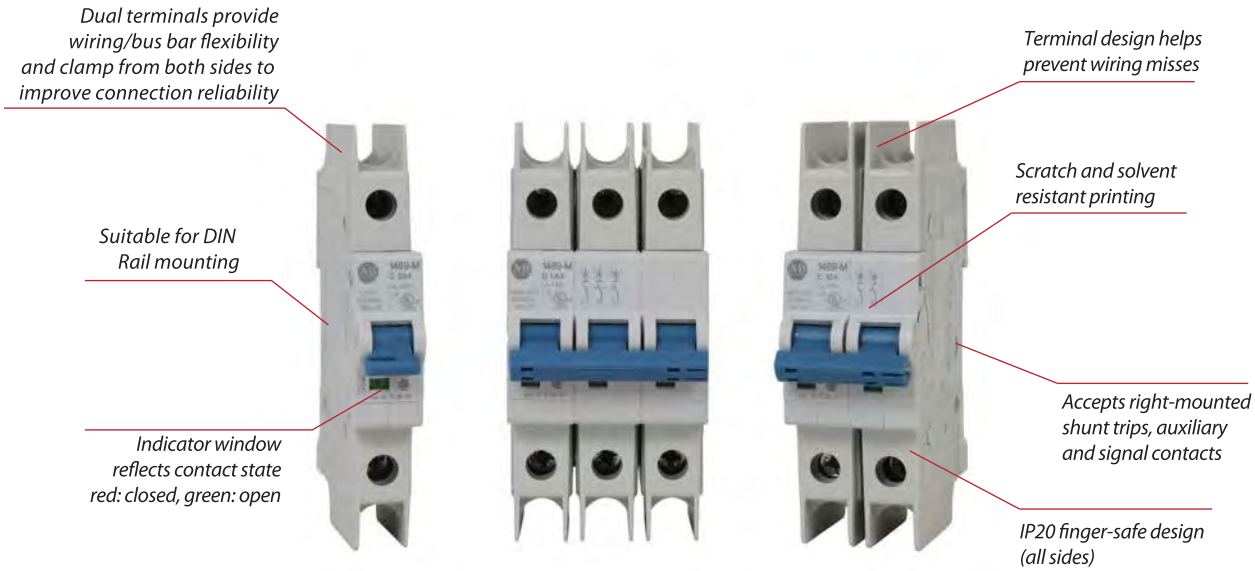

Bulletin 1489-M thermal-magnetic Circuit Breakers are approved for branch circuit protection in the United States and Canada, and are certified as Miniature Circuit Breakers for IEC applications.

These branch protectors are compatible with many accessories to meet diverse application needs, including UL 508 Listed bus bars for convenience in panel assembly, auxiliary contacts, signal contacts and shunt trips for versatility, and lockout attachments for safety during maintenance.

Features

- Current limiting
- Fast breaking time
- High rated voltage
- Superior shock and vibration resistance to help prevent nuisance tripping
- Dual terminals allow a more secure connection of two wires, or both a wire and bus bar
- Terminal design helps prevent wiring misses by directing wires into the terminal openings, even while tightening
- Reversible line and load connections
- Single and multi-pole toggle mount lock out attachments available for Lockout/Tagout (LOTO)
- RoHS compliant and fully recyclable device
- Suitable for extreme ambient conditions

1489-M Circuit Breakers	
Rated Voltage	UL/CSA: Max. 480Y/277V AC IEC: U_e 230/400V AC
Interrupting Capacity	UL/CSA: 10 kA IEC: 15 kA
Current Ratings	0.5...63 A
Poles	1, 2, 3
Trip Curves	C, D
Standards Compliance	UL 489 CSA C22.2 No. 5.1 EN 60947-2 GB 14048.2
Certifications	UL Listed, File No. E197878 CSA Certified, File No. 259391 CE Marked VDE Certified CCC Certified RoHS Compliant

Catalog Number Explanation

Note: Examples given in this section are for reference purposes. This basic explanation should not be used for product selection; some combinations may not produce a valid catalog number.

1489	-	M	1	C	005
		a	*b*	*c*	*d*

a

Voltage Type	
Code	**Description**
M	AC Circuit Breaker

b

Poles	
Code	**Description**
1	1-Pole
2	2-Pole
3	3-Pole

c

Trip Curve	
Code	**Trip Curve**
C	Trip Curve C
D	Trip Curve D

d

Rated Current (I_n)	
Code	**Current [A]**
005	0.5
010	1
016	1.6
020	2
030	3
040	4
050	5
060	6
070	7
080	8
100	10
130	13
150	15
160	16
200	20
250	25
300	30
320	32
350	35
400	40
500	50
600	60
630	63

Product Selection

1-Pole Circuit Breakers

Photo/Wiring Diagram	UL/CSA Max. Voltage	IEC/EN Max. Voltage	Continuous Current Rating (I_n) [A]	Trip Curve C Inductive 5...10 I_n Cat. No.	Trip Curve D Highly Inductive 10...20 I_n Cat. No.
1-pole	277V AC, 48V DC	230V AC	0.5	1489-M1C005	1489-M1D005
			1	1489-M1C010	1489-M1D010
			1.6	1489-M1C016	1489-M1D016
			2	1489-M1C020	1489-M1D020
			3	1489-M1C030	1489-M1D030
			4	1489-M1C040	1489-M1D040
			5	1489-M1C050	1489-M1D050
			6	1489-M1C060	1489-M1D060
			7	1489-M1C070	1489-M1D070
			8	1489-M1C080	1489-M1D080
			10	1489-M1C100	1489-M1D100
			13	1489-M1C130	1489-M1D130
			15	1489-M1C150	1489-M1D150
			16	1489-M1C160	1489-M1D160
			20	1489-M1C200	1489-M1D200
			25	1489-M1C250	1489-M1D250
			30	1489-M1C300	1489-M1D300
			32	1489-M1C320	1489-M1D320
			35	1489-M1C350	1489-M1D350
	C Curve: 277V AC, 48V DC D Curve: 240V AC, 48V DC		40	1489-M1C400	1489-M1D400
	240V AC, 48V DC		50	1489-M1C500	1489-M1D500
			60	1489-M1C600	1489-M1D600
			63	1489-M1C630	1489-M1D630

ITEM 260A

StructuredGround™ Universal Ground Bar System

PANDUIT®

SPECIFICATION SHEET

specifications

Provide a field wiring terminal for the connection of an equipment grounding conductor in each control panel and enclosure. The terminal shall be UL 467 Listed or CSA 22.2 certified. The equipment grounding conductor shall have electrical continuity with the enclosure or sub-panel. The field wiring terminal may also provide multiple locations or ports for terminating equipment ground conductors from devices inside the panel or enclosure, functioning as the ground bar within the panel or enclosure. The ground bar shall provide a means to attach and to identify the main equipment grounding conductor.

PATENT PENDING

technical information

Performance level:	UL 467 Listed and CSA 22.2 Certified for grounding and bonding an equipment grounding conductor up to 2/0 AWG; meets UL 508A requirements
Main:	Provides a location for the main equipment grounding conductor using a compression or mechanical connector
Wire ports:	Accept bare stripped copper wire from #14 to #4 AWG Accept wire ferrules from #14 AWG to #6 AWG Top of ground bar accepts ring terminals, compression connectors or mechanical connectors with a ¼" stud hole size and maximum width of 0.55"
Materials:	Ground bars and bonding stand-offs precision machined from 110 electrolytic copper with a 99.9% copper content and then tin-plated for additional corrosion resistance
Packaging:	Each part is provided with all fasteners required for terminating wires and for each mounting option

key features and benefits

Flexible design	Works with all types of wire termination methods including stripped wire, ferrules, terminals, and compression or mechanical connectors; compatible with over 140 Panduit connectors
Multiple mounting options	In addition to surface mounting, two mounting stand-off options are available, one that bonds to the mounting surface and one that isolates from the mounting surface; both options provide additional finger wiring space in tight places
Unique geometry	The unique shape of the universal ground bar allows more surface contact between the wire connectors and the ground bar

applications

The StructuredGround™ Universal Ground Bar System (UGB) offers multiple termination methods and mounting options making it ideal for any control panel or enclosure application. The UGB enables the end user to choose the method in which to terminate conductors with connectors of their choice or simply cut and strip the wires. The UGB system will help reduce the types of ground bars that a panel shop or distributor needs to keep in stock to meet the various applications and customer requirements.

Universal Ground Bar System

6-port ground bar:	UGB2/0-414-6
12-port ground bar:	UGB2/0-414-12
18-port ground bar:	UGB2/0-414-18
Isolation standoffs:	UGB-IN-SO
Bonding standoffs:	UGB-B-SO

Recommended Connectors for Main Equipment Ground Conductor, Maximum 2/0 AWG

Copper Mechanical with Anti-Rotation

#14 – 2/0 AWG:	CLMAR2/0-14-Q

Two-Hole Copper Compression, 1/4" Stud Hole with 5/8" Spacing; #14 to 2/0 AWG

#14 – 10 AWG:	LCA10-14A-L
#8 AWG:	LCD8-14A-L
#6 AWG:	LCD6-14A-L
#4 AWG:	LCD4-14A-L
#2 AWG:	LCD2-14A-Q
#1 AWG:	LCD1-14A-E
1/0 AWG:	LCD1/0-14A-X
2/0 AWG:	LCD2/0-14A-X

One-Hole Copper Compression, 1/4" Stud Hole; #14 to 2/0 AWG

#14 – 10 AWG:	LCA10-14-L
#8 AWG:	LCAS8-14-L
#6 AWG:	LCAS6-14-L
#4 AWG:	LCAS4-14-L
#2 AWG:	LCAS2-14-Q
#1 AWG:	LCAS1-14-E
1/0 AWG:	LCAS1/0-14-X
2/0 AWG:	LCAS2/0-14-X

One and two-hole copper compression connectors available for both code and flex conductors, with narrow tongue and bent tongue configurations.

Recommended Connectors for Port Connections

Ring Terminals, ¼" Stud Hole, Maximum Width of 0.55"; #22 to #4 AWG

Ring terminals available with vinyl, nylon, KYNAR*, high-temp, or heavy duty insulation or non-insulated.

Compression Connectors, Maximum Width of 0.55"; up to #4 AWG Typical

Ferrules, Minimum Pin Depth of 12mm; #14 to #6 AWG

*KYNAR is a registered trademark of Atofina Chemicals, Inc.

ITEM 260A
StructuredGround™ Universal Ground Bar System

CLMAR2/0-14-Q: Tin-plated copper connector with anti-rotational feature.

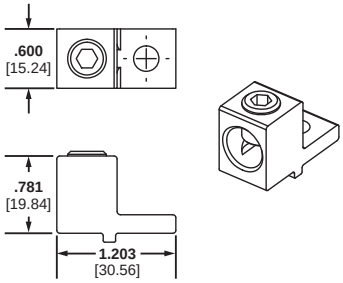

UGB2/0-414-18: 18-port UGB mounted directly to surface with the equipment grounding conductor terminated in an anti-rotational, copper mechanical connector.

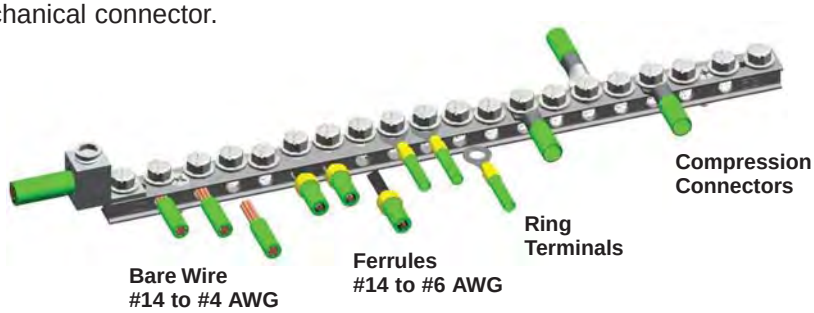

UGB-B-SO: Bonding stand-off.

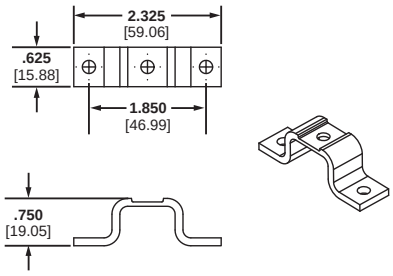

UGB2/0-414-12: 12-port UGB mounted on bonding stand-offs with the equipment grounding conductor terminated in a two-hole compression lug.

UGB-IN-SO: Isolation stand-off.

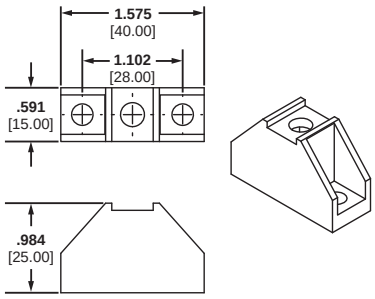

UGB2/0-414-6: 6-port UGB mounted on isolation stand-offs with the equipment grounding conductor terminated in an anti-rotational, copper mechanical connector.

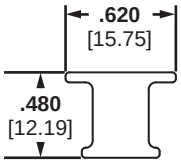

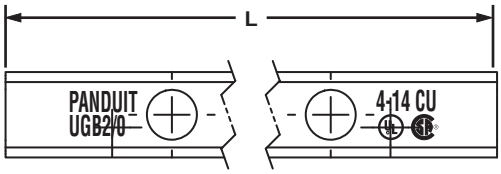

Part Number	"L" Dim.
UGB2/0-414-6	4.92" (125mm)
UGB2/0-414-12	8.28" (210mm)
UGB2/0-414-18	11.64" (295mm)

WORLDWIDE SUBSIDIARIES AND SALES OFFICES

PANDUIT CANADA
Markham, Ontario
cs-cdn@panduit.com
Phone: 800.777.3300

PANDUIT EUROPE LTD.
London, UK
cs-emea@panduit.com
Phone: 44.20.8601.7200

PANDUIT SINGAPORE PTE. LTD.
Republic of Singapore
cs-ap@panduit.com
Phone: 65.6305.7575

PANDUIT JAPAN
Tokyo, Japan
cs-japan@panduit.com
Phone: 81.3.6863.6000

PANDUIT LATIN AMERICA
Guadalajara, Mexico
cs-la@panduit.com
Phone: 52.33.3777.6000

PANDUIT AUSTRALIA PTY. LTD.
Victoria, Australia
cs-aus@panduit.com
Phone: 61.3.9794.9020

For a copy of Panduit product warranties, log on to www.panduit.com/warranty

For more information

Visit us at www.panduit.com

Contact Customer Service by email: cs@panduit.com or by phone: 800.777.3300 and reference GRSP08

©2011 Panduit Corp.
ALL RIGHTS RESERVED.

Printed in the U.S.A.
SA-GRSP08
5/2011

Bulletin 700-HK — "Slim Line" Relay

- 8 A/16 A contact ratings
- DPDT/SPDT
- Plug-in blade-style terminals
- Retainer clip with sockets
- Options: LED, push-to-test and manual override, socket-mounted surge suppressor module, or timer module
- Standard ON/OFF flag indicator
- Relay faceplate accepts optional Bulletin 1492 snap-in markers
- Choice of standard silver/nickel contacts or silver/nickel with gold plated contacts
- Maximum duty version available

Table of Contents

Product Selection ..... this page
Accessories..... 9-40
Specifications..... 9-44
Approximate Dimensions..... 9-43

Standards Compliance and Certifications

See Specification table in this section, page 9-42.

Product Selection
Slim Line Relay with Plug-in Quick Connect Terminations

	Description	Contact Rating	Wiring Diagrams U.S./Canada	Wiring Diagrams International	Coil Voltage	Cat. No.∗❄‡
	SPDT 1-Pole 1 Form C AgNi Contacts	16 A	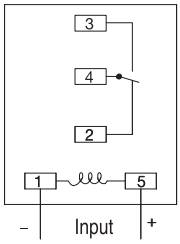	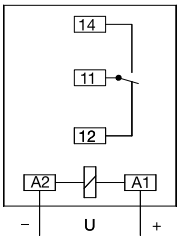	6V AC	700-HK36A06
					12V AC	**700-HK36A12**
					24V AC	**700-HK36A24**
					120V AC	§ **700-HK36A1**
					240V AC	§ **700-HK36A2**
					6V DC	700-HK36Z06
					12V DC	**700-HK36Z12**
					24V DC	§ **700-HK36Z24**
					48V DC	**700-HK36Z48**
Bulletin 700-HK SPDT	Socket		***700-HN121, 700-HN221, 700-HN223***	***700-HN121, 700-HN221, 700-HN223***	110V DC	700-HK36Z1
	DPDT 2-Pole 2 Form C AgNi Contacts	8 A	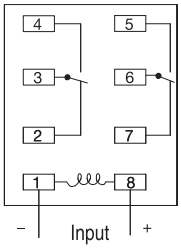	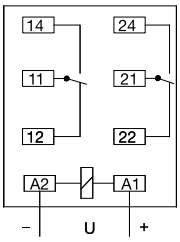	6V AC	700-HK32A06
					12V AC	**700-HK32A12**
					24V AC	**700-HK32A24**
					120V AC	**700-HK32A1**
					240V AC	**700-HK32A2**
					6V DC	**700-HK32Z06**
					12V DC	**700-HK32Z12**
					24V DC	**700-HK32Z24**
					48V DC	700-HK32Z48
Bulletin 700-HK DPDT	Socket		***700-HN122, 700-HN222, 700-HN224***	***700-HN122, 700-HN222, 700-HN224***	110V DC	**700-HK32Z1**

∗ LED Option: Add suffix (**-4**) to the selected Bulletin 700-HK relay Cat. No. except for the 240V AC units, add (**-4L**).
❄ For AgNi Contact with Gold Plating: Replace "3" with "X" in Cat. No. For example, if Cat. No. 700-HK36A1 is required with Gold Plating, the new catalog number is 700-HKX6A1.
‡ Push-to-Test + Manual Override + LED Option: Add suffix (-3-4) to the selected 700-HK Relay catalog number, except for the 240V AC Units, add (-3-4L).
§ For high inductive, Tungsten, or Capacitive load applications, replace the "3" with a "M" in the catalog number. Only available in a SPDT configuration and with 24V DC, 120V AC or 240V AC coil voltages.

		Cat. No. 700-HK...			
Electrical Ratings					
Rated Thermal Current (I_{th})		1-Pole, 1 CO, SPDT — 16 A		2-Pole, 2 CO, DPDT — 8 A	
Rated Insulation Voltage (U_i)		250V IEC, 300V UL/CSA			
Contacts	Inductive V AC	120V AC	AC-15, 6.2 A B300 Pilot Duty, 3 A A300 (700-HKM_) 1/3 Hp (0.24 kW) 1-phase	120V AC	AC-15, 2.9 A B300 Pilot Duty, 3.0 A 1/4 Hp (0.18 kW), 1-phase
		240V AC	AC-15, 3.1 A B300 Pilot Duty, 1.5 A A300 (700-HKM_) 3/4 Hp (0.55 kW), 1-phase	240V AC	AC-15, 1.4 A B300 Pilot Duty, 1.5 A 1/2 Hp (0.37 kW), 1-phase
		230V AC	0.55 kW, 1-phase	230V AC	0.37 kW, 1-phase
	Inductive V DC	24V DC	DC-13, 5.0 A	24V DC	DC-13, 3.0 A
		125V DC	DC-13, 0.2 A R300 Pilot Duty, 0.22 A	125V DC	DC-13, 0.2 A R300 Pilot Duty, 0.22 A
		250V DC	DC-13, 0.1 A R300 Pilot Duty, 0.11 A	5 A, 250V AC	DC-13, 0.1 A R300 Pilot Duty, 0.11 A
	Resisitive	230V AC	AC-1, 16 A	230V AC	AC-1, 8 A
		277V AC	16 A, General Use	277V AC	8 A, General Use
	Make, Break & Continuous	30V DC	DC-1, 12 A 10 A, Resistive	30V DC	DC-1, 6 A 6 A, Resistive
Min. Permissible Contact Ratings		300 mW (5V/60 mA or 60V/5 mA) for AgNi Contacts (700-HK3_) 50 mW (5V/10 mA or 25V/2 mA) for AgNi + Gold Contacts (700-HKX_) 500 mW (100V/5 mA or 5V/100 mA) for $AgSnO_2$ Contacts (700-HKM_)			
Permissible Coil Voltage Variation	Pickup: holding Voltage: Must Dropout Voltage:	80…110% of Nominal Voltage at 50/60 Hz, 73...110% of Nominal Voltage at DC 80% of Nominal V AC at 50/60 Hz, 40% of Nominal V DC 20% of Nominal V AC at 50/60 Hz, 10% Nominal V DC			
Power Consumption		1.2V A (V AC Coils), 0.5 W (V DC Coils)			
Coil Voltages		See Overview/Product Selection			
Design Specification/Test Requirements					
Dielectric Withstand Voltage	Between Open Contacts (VRMS)	1000V AC			
	Contact to Coil (VRMS)	1600V AC			
Mechanical					
Degree of Protection		IP 20 (guarded terminal sockets), RT II — Flux-proof (Relay)			
Mechanical Life Operations		10 x 10^6			
Electrical Life Cycles		230V AC, 16 A Resistive: 100 000 min. 277V AC, 16 A Resistive: 30 000 min. 30V DC, 10 A Resisitive: 30 000 min. B300, R300, Hp (kW): 6000 min. A300 (700-HKM_): 100,000 min.		230V AC, 8 A Resistive: 100 000 min. 277V AC, 8 A Resistive: 30 000 min. 30V DC, 6 A Resistive: 30 000 min. B300, R300, Hp (kW): 6000 min.	
Switching Frequency		Mechanical: 18,000 cycles/hr. Electrical: 900 cycles/hr.			
Operating Time at Nominal Voltage at 20 °C (ms)	Pickup	15 ms max.			
	Dropout	5 ms max.			
Vibration	Operational	10…2000 Hz, 0.76 mm (0.03 in.) 2.5 G			
	Non-Operational	10…2000 Hz, 0.76 mm (0.03 in.) 5.0 G			
Shock	Operational	15 G			
	Non-Operational	50 G			
Environmental					
Temperature	Operating	–40…+70 °C (–40…+158 °F)			
	Storage	–40…+85 °C (–40…+185 °F)			
Altitude		2000 m (6560 ft)			
Construction					
Insulating Material		Molded High Dielectric Material			
Enclosure		Transparent Dust Cover			
Contact Material		700-HK3_: Silver nickel (AgNi); 700-HKX_: Silver Nickel + Gold Plating (AgNi + Au); 700-HKM_: Silver Tin Oxide ($AgSnO_2$)			
Terminal Markings on Socket		In accordance with EN 50005			
Sockets		**1-Pole**		**2-Pole**	
	Screw Terminal	700-HN121 (10 A @ 70 °C) 700-HN221 (16 A @ 50 °C, 12 A @ 70 °C)		700-HN122 (2 x 5 A @ 70 °C) 700-HN222 (2 x 8 A @ 70 °C)	
	Spring Clamp (Available September 2006)	700-HN223 (15 A @ 40 °C with 2 conductors per terminal) (10 A @ 70 °C with 1 conductor per terminal)		700-HN224 (2 x 8 A@ 70 °C)	
Approvals					
Certifications		CSA Certified, File 75088, UL Recognized, File E3125 Guide NLDX2/NLCX8, cULus Listed with Allen-Bradley sockets (File No. 3125 Guide NLDX/NLDX7), CE Marked			
Standards		EN61810-1, CSA 22.2 No. 14, UL 508			

Approximate Dimensions

Approximate Dimensions are shown in millimeters (inches). Approximate Dimensions are not intended to be used for manufacturing purposes.

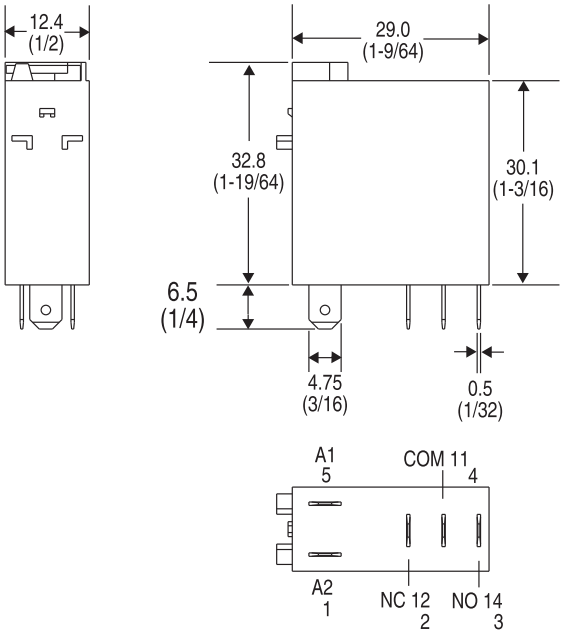

Cat. No. 700-HK36_ (SPDT)

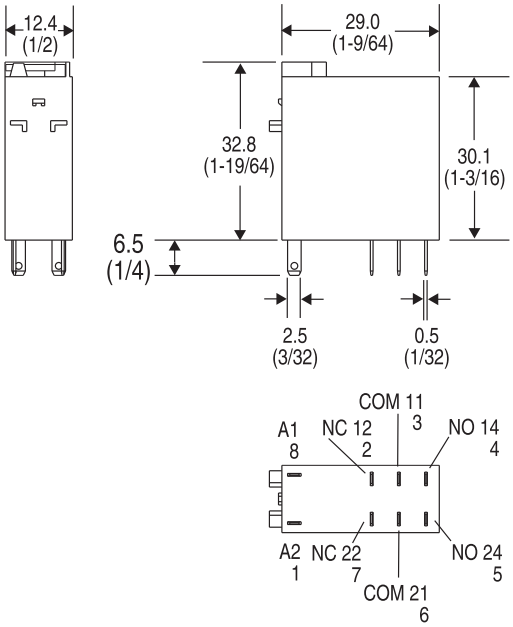

Cat. No. 700-HK32_ (DPDT)

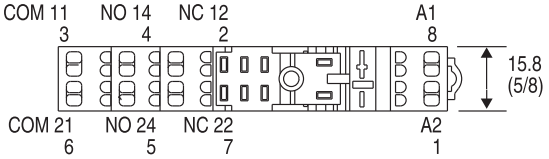

Cat. No. 700-HN224

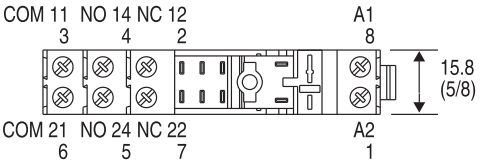

Cat. No. 700-HN222

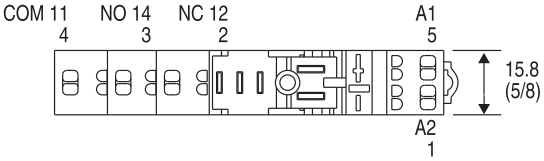

Cat. No. 700-HN223

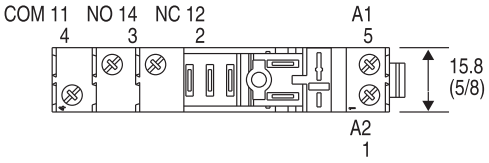

Cat. No. 700-HN221

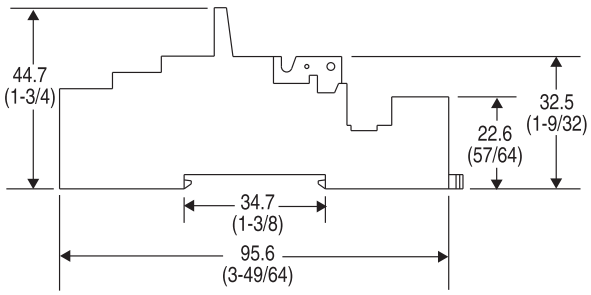

Cat. No. 700-HN223, 700-HN224
Wire Size: 0.2 mm^2...1.5 mm^2 (#24 AWG....#14 AWG)
Either Solid or Stranded
Strip Length: 8 mm (5/16 in)

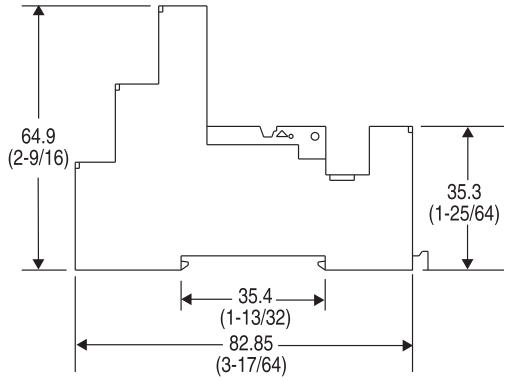

Cat. No. 700-HN221, 700-HN222
Wire Size: 0.2 mm^2...2.5 mm^2 (#24 AWG....#12 AWG)
Either Solid or Stranded
Strip Length: 8 mm (5/16 in), Torque: 0.8Nm (7.0 lb.-in.)

https://www.phoenixcontact.com/us/products/5600461

Socket - EM-DUO 120/15 - 5600461

Please be informed that the data shown in this PDF Document is generated from our Online Catalog. Please find the complete data in the user's documentation. Our General Terms of Use for Downloads are valid
(http://phoenixcontact.com/download)

Photo shows EM-DUO 120/15

Rail-mounted dual power outlet with two 120 V AC/15 A receptacles for 35 mm DIN rail per EN 60715. For enhanced safety, the grounding pin is located at the top to prevent shorting between the hot and neutral blades. Housing color: ivory. National version: USA. Connection type: screw.

Key Commercial Data

Packing unit	1 pc
GTIN	4 017918 929930
GTIN	4017918929930
Weight per Piece (excluding packing)	245.600 g
Custom tariff number	85366990
Country of origin	United States

Technical data

Dimensions

Width	82 mm
Height	135 mm
Depth	49 mm

Ambient conditions

Ambient temperature (operation)	-35 °C ... 60 °C

General

Nominal voltage U_N	125 V AC
Nominal current I_N	15 A

Socket - EM-DUO 120/15 - 5600461

Technical data

General

For country-specific use in	USA
	Canada
	Mexico
	Bahamas
	Bermuda
	Columbia
	Costa Rica
	Ecuador
	El Salvador
	Panama
	Puerto Rico
	Taiwan
	Venezuela
	Virgin Islands
Color	ivory
Insulating material	Polycarbonate & ABS blend
Standards/regulations	UL 508
	CSA 22.2

Connection data

Conductor cross section solid max.	6 mm²
Conductor cross section flexible max.	4 mm²
Conductor cross section AWG max.	10
Connection method	Screw connection
Stripping length	8 mm
Screw thread	M3

Standards and Regulations

Standards/regulations	UL 508
	CSA 22.2

Environmental Product Compliance

REACh SVHC	Lead 7439-92-1
China RoHS	Environmentally Friendly Use Period = 50
	For details about hazardous substances go to tab “Downloads”, Category “Manufacturer's declaration”

Socket - EM-DUO 120/15 - 5600461

Classifications

eCl@ss

eCl@ss 4.0	27142305
eCl@ss 4.1	27142305
eCl@ss 5.0	27143412
eCl@ss 5.1	27142300
eCl@ss 6.0	27142300
eCl@ss 7.0	27142305
eCl@ss 8.0	27142305
eCl@ss 9.0	27142305

ETIM

ETIM 2.0	EC001325
ETIM 3.0	EC001325
ETIM 4.0	EC001663
ETIM 5.0	EC001663
ETIM 6.0	EC001663

UNSPSC

UNSPSC 6.01	30211806
UNSPSC 7.0901	39121406
UNSPSC 11	39121406
UNSPSC 12.01	39121406
UNSPSC 13.2	39121406

Approvals

Approvals

Approvals

UL Listed / cUL Listed / cULus Listed

Ex Approvals

Approval details

Socket - EM-DUO 120/15 - 5600461

Approvals

UL Listed		http://database.ul.com/cgi-bin/XYV/template/LISEXT/1FRAME/index.htm	FILE E 238705

Nominal voltage UN	125 V
Nominal current IN	15 A
mm²/AWG/kcmil	30-10

cUL Listed		http://database.ul.com/cgi-bin/XYV/template/LISEXT/1FRAME/index.htm	FILE E 238705

Nominal voltage UN	125 V
Nominal current IN	15 A
mm²/AWG/kcmil	30-10

cULus Listed	

Phoenix Contact 2019 © - all rights reserved
http://www.phoenixcontact.com

Bulletin 800T/H

30.5 mm Push Buttons

Selector Switches

3-Position Selector Switch Devices, Non-Illuminated

Standard Knob Operator
Cat. No. 800T-J2A

Knob Lever Operator
Cat. No. 800T-J17A

Standard Knob Operator
Cat. No. 800H-JR2A

Contact Type	Operator Position			M = Maintained S = Spring Return	Type 4/13 Standard Knob Cat. No.	Type 4/13 Knob Lever Cat. No.	Type 4/4X/13 Standard Knob Cat. No.
	↖	↑	↗				
No Contacts	—	—	—	M M M	**800T-J2**	**800T-J17**	**800H-JR2**
				S→M M	**800T-J4**	800T-J18	**800H-JR4**
				M M←S	**800T-J5**	800T-J19	**800H-JR5**
				S→M←S	**800T-J91**	**800T-J20**	**800H-JR91**
1 N.O. - 1 N.C.	O X	O O	X O	M M M	**800T-J2A**	**800T-J17A**	**800H-JR2A**
				S→M M	**800T-J4A**	**800T-J18A**	**800H-JR4A**
				M M←S	**800T-J5A**	**800T-J19A**	**800H-JR5A**
				S→M←S	**800T-J91A**	**800T-J20A**	**800H-JR91A**

Note: X = Closed/O = Open

800 T ___ – J 2 ___ C

a = T, b = ___, c = J, d = 2, e = ___, f = C

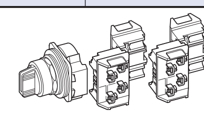

a

Protection Rating	
Code	**Description**
T	Metal, Type 4/13
H	Plastic, Type 4/4X/13

b

Finger-Safe Guards	
Code	**Description**
Blank	No guards
C	Guards on terminals

c

Knob Insert Colors		
800T Type 4/13 Code	**Description**	**800H Type 4/4X/13 Code**
J	White	JR
JX	Packet of colored inserts∗	JRX
Metal Wing Lever Colors❄		
Code	**Color**	**Code**
JA	Red	—
JG	Grey	—

d

Knob/Lever Type Operators	
Standard Knob	
Code	**Operator Function**
2	Maintained
4	Spring return from left
5	Spring return from right
91	Spring return from both
Knob Lever❄	
Code	**Operator Function**
17	Maintained
18	Spring return from left
19	Spring return from right
20	Spring return from both
Metal Wing Lever❄	
Code	**Operator Function**
11	Maintained
15	Spring return from left
16	Spring return from right
141	Spring return from both
Coin Slot❄	
Code	**Operator Function**
10	Spring return from both

e

Cam Option‡♣	
Code	**Description**
Blank	KB7 cam (std.)
KA1	KA1 cam
KA7	KA7 cam

e (cont'd)

Cam Option‡♣	
Code	**Description**
KC1	KC1 cam
KC7	KC7 cam
KD7	KD7 cam
KE7§	KE7 cam
KQ1	KQ1 cam
KQ7	KQ7 cam
KR1§	KR1 cam
KR7§	KR7 cam
KT1§	KT1 cam
KT7§	KT7 cam
KU7§	KU7 cam

f

Contact Blocks	
Code	**Description**
Blank	No contacts on operator
Standard	
A	1 N.O. - 1 N.C. 1-**800T-XA** on white side
B	2 N.O. - 2 N.C. 2-**800T-XA**s — 1 on white side/1 on black side
Pen*TUFF* (Low Voltage)	
AV	1 N.O. - 1 N.C. 1-**800T-XAV** on white side
BV	2 N.O. - 2 N.C. 2-**800T-XAV**s — 1 on white side/1 on black side

f (cont'd)

Contact Blocks♣	
Code	**Description**
Blank	No contacts
Class 1, Div. 2/Zone 2	
Logic Reed	
AR	1 N.O. - 1 N.C. 1-**800T-XAR** on white side
BR	2 N.O. - 2 N.C. 2-**800T-XAR**s — 1 on white side/1 on black side
Sealed Switch	
AP	1 N.O. - 1 N.C. 1-**800T-XAP** on white side
BP	2 N.O. - 2 N.C. 2-**800T-XAP**s — 1 on white side/1 on black side
Stackable Sealed Switch	
AY	1 N.O. - 1 N.C. 1-**800T-XAY** on white side
BY	2 N.O. - 2 N.C. 2-**800T-XAY**s — 1 on white side/1 on black side

∗ One insert of each color (blue, green, orange, red, and yellow).
❄ Only available on Bul. 800T, Type 4/13 operators.
‡ If an overlapping cam is required, consult your local distributor.
§ Not available with wing levers.
♣ See Table 1 for cam selections and associated targets.

Table 1. Cam and Contact Block Functionality Table

Contact Block Suffix Code	Contact Block Side	Circuits	KB7 (Std.)			KA1			KA7			KC1			KC7			KD7			KE7			KQ1			KQ7			KR1			KR7			KT1			KT7			KU7		
A_, B_, H_, C_	White	A	X	O	O	X	O	O	O	O	X	O	O	X	X	O	O	O	O	X	X	O	O	X	O	X	X	O	X	X	O	X	X	O	X	O	O	X	X	O	O	X	O	O
		B	O	O	X	O	X	O	O	X	O	O	X	O	O	X	O	O	X	O	O	X	X	O	X	O	O	X	O	O	X	O	O	X	O	X	O	O	O	O	X	O	X	O
B_, H_, C_	Black	A	X	O	O	X	O	O	O	O	X	O	O	X	X	O	O	X	O	O	O	O	X	O	O	X	X	O	O	O	O	X	X	O	O	O	O	X	X	O	O	O	O	X
		B	O	O	X	O	X	O	O	X	O	X	O	O	O	O	X	O	X	O	X	X	O	O	X	O	O	X	O	X	X	O	O	X	X	X	X	O	O	X	X	X	X	O
H_, C_	White	A	X	O	O	X	O	O	O	O	X	O	O	X	X	O	O	O	O	X	X	O	O	X	O	X	X	O	X	X	O	X	X	O	X	O	O	X	X	O	O	X	O	O
		B	O	O	X	O	X	O	O	X	O	O	X	O	O	X	O	O	X	O	O	X	X	O	X	O	O	X	O	O	X	O	O	X	O	X	O	O	O	O	X	O	X	O
C_	Black	A	X	O	O	X	O	O	O	O	X	O	O	X	X	O	O	X	O	O	O	O	X	O	O	X	X	O	O	O	O	X	X	O	O	O	O	X	X	O	O	O	O	X
		B	O	O	X	O	X	O	O	X	O	X	O	O	O	O	X	O	X	O	X	X	O	O	X	O	O	X	O	X	X	O	O	X	X	X	X	O	O	X	X	X	X	O

Note: X = Closed/O = Open

30.5 mm Push Buttons

Push Button Operators

Momentary Contact Push Button Devices, Illuminated

Extended Head Without Guard
Cat. No. 800T-PB16R

Extended Head without Guard
Cat. No. 800H-PRB16R

Type	Lamp Type	Volts	Color	Type 4/13 Extended Head Without Guard∗ Cat. No.	Type 4/13 Extended Head With Guard∗ Cat. No.	Type 4/4X/13 Extended Head without Guard∗ Cat. No.	Type 4/4X/13 Extended Head with Guard∗ Cat. No.
Operator Only❄				**800T-SB00XX**	800T-SA00XX	800H-SRB00XX	800H-SRA00XX
Full Voltage	Incandescent	24V AC/DC	Red	**800T-QB24R**	**800T-QA24R**	**800H-QRB24R**	800H-QRA24R
			Green	**800T-QB24G**	**800T-QA24G**	**800H-QRB24G**	**800H-QRA24G**
			Amber	**800T-QB24A**	**800T-QA24A**	**800H-QRB24A**	800H-QRA24A
	No Lamp	0…250V AC/DC	No Lens	800T-QBN25	800T-QAN25	800H-QRBN25	800H-QRAN25
Universal	LED	12…130V AC/DC	Red	**800T-QBH2R**	**800T-QAH2R**	**800H-QRBH2R**	**800H-QRAH2R**
			Green	**800T-QBH2G**	**800T-QAH2G**	**800H-QRBH2G**	**800H-QRAH2G**
			Amber	**800T-QBH2A**	**800T-QAH2A**	**800H-QRBH2A**	**800H-QRAH2A**
Transformer	Incandescent	120V AC, 50/60 Hz	Red	**800T-PB16R**	**800T-PA16R**	**800H-PRB16R**	**800H-PRA16R**
			Green	**800T-PB16G**	**800T-PA16G**	**800H-PRB16G**	**800H-PRA16G**
			Amber	**800T-PB16A**	**800T-PA16A**	**800H-PRB16A**	**800H-PRA16A**
	LED		Red	**800T-PBH16R**	**800T-PAH16R**	**800H-PRBH16R**	800H-PRAH16R
			Green	**800T-PBH16G**	**800T-PAH16G**	**800H-PRBH16G**	**800H-PRAH16G**
			Amber	**800T-PBH16A**	**800T-PAH16A**	800H-PRBH16A	800H-PRAH16A
	No Lamp		No Lens	800T-PBN16	800T-PAN16	800H-PRBN16	800H-PRAN16

∗ Includes as standard one Cat. No. 800T-XA (1 N.O. - 1 N.C.) contact block.
❄ Operator only supplied without power module, lamp, lens cap, or contact blocks.

800	T		–	P	B	H	16	R	
	a	*b*		*c*	*d*	*e*	*f*	*g*	*h*

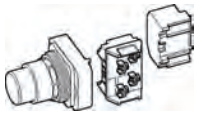

a

Protection Rating	
Code	Description
T	Metal, Type 4/13
H	Plastic, Type 4/4X/13

b

Finger-Safe Guards	
Code	Description
Blank	No guards
C	Guards on terminals

c

Power Module Type		
800T Type 4/13 Code	Description	800H Type 4/4X/13 Code
P	Transformer (or dual input)	PR
Q	Full voltage/ Universal	QR

d

Head Type	
Code	Description
A	Extended head with guard
B	Extended head without guard
M	Mushroom
MJ	Jumbo mushroom

e

Illumination Options	
Code	Description
Blank	Incandescent
H	LED
Dual Input	
D	Diode type‡
T	Transformer — relay type
TH	Transformer — relay type LED

f

Voltage	
Transformer	
Code	Description
16	120V AC, 50/60 Hz
26	240V AC, 50/60 Hz
46	480V AC, 50/60 Hz
56	600V AC, 50/60 Hz
Full Voltage — Incandescent	
12	12V AC/DC
24	24V AC/DC
48	48V AC/DC
10	120V AC/DC
20	240V AC/DC
Universal — LED	
2	12…130V AC/DC
Dual Input	
16	120V AC
24	24V AC/DC➢

g

Lens Color	
Code	Description
Blank	No lens with standard contacts 1 N.O. - 1 N.C.
X	No lens if ordering any contacts other than standard 1 N.O. - 1 N.C.
A	Amber
B	Blue
C	Clear
G	Green
R	Red
W	White

h

Contact Block(s)	
Code	Description
X	No contacts
Standard	
Blank	1 N.O. - 1 N.C.
D1	1 N.O.
Pen*TUFF* (Low Voltage)	
AV	1 N.O. - 1 N.C.
Class 1, Div. 2/Zone 2	
Logic Reed	
AR	1 N.O. - 1 N.C.
Sealed Switch	
AP	1 N.O. - 1 N.C.
Stackable Sealed Switch	
AY	1 N.O. - 1 N.C.

‡ Diode type dual input provides circuit isolation via opposing diodes. Not recommended for use with solid-state outputs.
➢ Dual input diode only.

HIRSCHMANN
A BELDEN BRAND

Product information
SPIDER 5TX

Industrial Ethernet:Entry Level Hubs And Switches:Unmanaged Standard Rail Switches:SPIDER 5TX

http://www.e-catalog.beldensolutions.com/link/57078-24455-49855-50103-37792/en/conf/uistate

Name	SPIDER 5TX
	Entry Level Industrial ETHERNET Rail Switch, store and forward switching mode, Ethernet and Fast-Ethernet (10/100 Mbit/s)
Delivery informations	
Availability	available
Product description	
Description	Entry Level Industrial ETHERNET Rail Switch, store and forward switching mode, Ethernet and Fast-Ethernet (10/100 Mbit/s)
Port type and quantity	5 x 10/100BASE-TX, TP cable, RJ45 sockets, auto-crossing, auto-negotiation, auto-polarity
Type	SPIDER 5TX
Order No.	943 824-002
More Interfaces	
Power supply/signaling contact	1 plug-in terminal block, 3-pin, no signal contact
Network size - length of cable	
Twisted pair (TP)	0 - 100 m
Network size - cascadibility	
Line - / star topology	Any
Power requirements	
Operating voltage	9,6 V DC - 32 V DC
Current consumption at 24 V DC	Max. 100 mA
Power consumption	Max. 2,2 W 7,5 Btu (IT)/h at 24 V DC
Service	
Diagnostics	LEDs (power, link status, data, data rate)
Ambient conditions	
Operating temperature	0 °C to +60 °C
Storage/transport temperature	-40 °C to +70 °C
Relative humidity (non-condensing)	10% to 95%
MTBF	123.7 years; MIL-HDBK 217F: Gb 25 °C
Mechanical construction	
Dimensions (W x H x D)	25 mm x 114 mm x 79 mm
Mounting	DIN Rail 35 mm
Weight	113 g
Protection class	IP 30
Mechanical stability	
IEC 60068-2-27 shock	15 g, 11 ms duration, 18 shocks
IEC 60068-2-6 vibration	3.5 mm, 3 Hz - 9 Hz, 10 cycles, 1 octave/min.; 1g, 9 Hz - 150 Hz, 10 cycles, 1 octave/min.
EMC interference immunity	
EN 61000-4-2 electrostatic discharge (ESD)	6 kV contact discharge, 8 kV air discharge
EN 61000-4-3 electromagnetic field	10 V/m (80 - 1000 MHz)
EN 61000-4-4 fast transients (burst)	2 kV power line, 4 kV data line
EN 61000-4-5 surge voltage	Power line: 2 kV (line/earth), 1 kV (line/line), 1 kV data line
EN 61000-4-6 conducted immunity	10 V (150 kHz - 80 kHz)
EMC emitted immunity	
FCC CFR47 Part 15	FCC CFR47 Part 15 Class A
EN 55022	EN 55022 Class A
Approvals	
Safety of industrial control equipment	cUL 508

HIRSCHMANN
A BELDEN BRAND

Industrial Ethernet:Entry Level Hubs And Switches:Unmanaged Standard Rail Switches:SPIDER 5TX

http://www.e-catalog.beldensolutions.com/link/57078-24455-49855-50103-37792/en/conf/uistate

Scope of delivery and accessories	
Scope of delivery	Device, terminal block, operating manual
Accessories to order separately	Rail power supply RPS 30, RPS 80 EEC or RPS 120 EEC, 19" installation frame

For more information please contact:
Hirschmann Automation and Control GmbH
Stuttgarter Strasse 45-51
72654 Neckartenzlingen
Germany
Phone: +49 7127/14-1809
E-Mail: inet-sales@belden.com

The information published in the websites has been compiled as carefully as possible. It is subject to alteration without notice in technical as well as in price-related/commercial respect.
The complete information and data were available on user documentation. Mandatory information can only be obtained by a concrete query.

HMI5121XL | HMI Series

12.1" Industrial HMI

- 1024 x 768 Pixel High-Resolution TFT
- Aluminum Enclosure
- Ethernet
- 2 Serial Ports

System	CPU	32-bit RISC Cortex-A8, 1 GHz
	Memory (RAM)	256 MB
	Memory (Flash)	256 MB
	RTC	Built-in
I/O Ports	Serial	1 x DE9P COM1: RS-232
		1 x DE9S COM1: RS-485 2 or 4 wire, COM3: RS-485 2 wire
	Ethernet	1 x 10/100 Base-T
	CANbus	N/A
	USB Host	1 x USB 2.0
	USB Client	1 x USB 2.0
	Audio	N/A
	Video	N/A
	Wi-Fi	N/A
	HDMI	N/A
	SD Card Slot	SD/SDHC
Display	Display Type	12.1" TFT LCD
	Size (W x H)	9.76 x 7.34 inches [248 x 187 mm]
	Resolution (pixels)	1024 x 768
	Luminance (cd/m²)	500
	Contrast Ratio	700:1
	Max. Colors	16.2 M
	Backlight Lifetime (hours)	50,000+
Touch Screen	Type	4-wire resistive touch
	Active Area Accuracy	Length (X) ± 2%, width (Y) ± 2%
Electrical	Input Voltage	24 ± 20% VDC
	Input Current	800 mA @ 24 VDC
	Power Isolation	Built-in
	Isolation Resistance	Exceed 50 MΩ at 500 VDC
Mechanical	Enclosure	Aluminum, charcoal grey
	PCB Coating	Yes
	Dimensions (W x H x D)	12.48 x 9.61 x 1.81 inches [317 x 244 x 46 mm]
	Weight	4.6 lbs. [2.1 kg]
	Mounting	Panel or VESA 75 x 75 mm mounting
Environmental	Operating Temperature	32° ~ 122° F (0° ~ 50° C)
	Storage Temperature	-4° ~ 140° F (-20° ~ 60° C)
	Relative Humidity	10% ~ 90% (non-condensing)
	Vibration Endurance	10 to 25 Hz (X, Y, Z direction, 2 G, 30 minutes)
	Ratings	IP66 compliant front panel, NEMA 4X indoor use only
	Certifications	cULus, CE, RoHS
Software	EZwarePlus (v4.00.01 or later)	
Notes		

Technical Data

Allen-Bradley

CompactLogix Controllers Specifications

CompactLogix 5370 Controller Catalog Numbers

1769-L16ER-BB1B, 1769-L18ER-BB1B, 1769-L18ERM-BB1B, 1769-L24ER-QB1B, 1769-L24ER-QBFC1B, 1769-L27ERM-QBFC1B,1769-L30ER, 1769-L30ER-NSE, 1769-L30ERM, 1769-L33ER, 1769-L33ERM, 1769-L36ERM

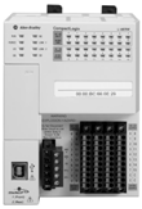

1769 Packaged Controller Catalog Numbers

1769-L23-QBFC1B, 1769-L23E-QB1B, 1769-L23E-QBFC1B

1769 Modular Controller Catalog Numbers

1769-L31, 1769-L32C, 1769-L35CR, 1769-L32E, 1769-L35E

1768 Controller Catalog Numbers

1768-L43, 1768-L43S, 1768-L45, 1768-L45S

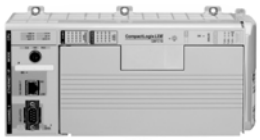

Memory Card Catalog Numbers

1784-CF128, 1784-SD1, 1784-SD2

Topic	Page
CompactLogix 5370 Controllers	4
1769 Packaged CompactLogix Controllers with Embedded I/O	33
1769 Modular CompactLogix Controllers	44
1768 CompactLogix Controllers	48
Controller Memory Use	55
Controller Compatibility	56
Controller Connections	59
Determine Total Connection Use	61
CompactLogix Controller Accessories	62

LISTEN.
THINK.
SOLVE.®

ITEM 510G

Table 1 - Environmental Specifications - 1768 and 1769 CompactLogix Controllers and CompactLogix 5370 Controllers

Attribute	1769-L16ER-BB1B, 1769-L18ER-BB1B, 1769-L18ERM-BB1B	1769-L24ER-QB1B, 1769-L24ER-QBFC1B, 1769-L27ERM-QBFC1B	1769-L30ER, 1769-L30ER-NSE, 1769-L30ERM, 1769-L33ER, 1769-L33ERM, 1769-L36ERM	1769-L23-QBFC1B, 1769-L23E-QB1B, 1769-L23E-QBFC1B	1769-L31, 1769-L32C, 1769-L35CR, 1769-L32E, 1769-L35E	1768-L43, 1768-L43S, 1768-L45, 1768-L45S
Temperature, operating IEC 60068-2-1 (Test Ad, Operating Cold), IEC 60068-2-2 (Test Bd, Operating Dry Heat), IEC 60068-2-14 (Test Na, Operating Thermal Shock)	-20…60 °C (-4…140 °F)	0…60 °C (32…140 °F)				
Temperature, storage IEC 60068-2-1 (Test Ab, Unpackaged Nonoperating Cold), IEC 60068-2-2 (Test Bb, Unpackaged Nonoperating Dry Heat), IEC 60068-2-14 (Test Na, Unpackaged Nonoperating Thermal Shock)	-40…85 °C (-40…185 °F)					
Temperature, surrounding air, max	60 °C (140 °F)					
Relative humidity IEC 60068-2-30 (Test Db, Unpackaged Damp Heat)	5...95% noncondensing					
Vibration IEC 60068-2-6 (Test Fc, Operating)	2 g @ 10…500 Hz(1)		5 g @ 10…500 Hz	2 g @ 10…500 Hz	5 g @ 10…500 Hz	
Shock, operating IEC 60068-2-27 (Test Ea, Unpackaged Shock)	30 g(1)		20 g - DIN rail 30 g - Panel	30 g	20 g - DIN rail 30 g - Panel	30 g
Shock, nonoperating IEC 60068-2-27 (Test Ea, Unpackaged Shock)	50 g(1), (2)		30 g - DIN rail 40 g - Panel	50 g	30 g - DIN rail 40 g - Panel	50 g
Emissions CISPR 11	Group 1, Class A					
ESD immunity IEC 61000-4-2	6 kV contact discharges 8 kV air discharges			4 kV contact discharges 8 kV air discharges	1769-L31 4 kV contact discharges 8 kV air discharges 1769-L32C, 1769-L35CR, 1769-L32E, 1769-L35E 6 kV contact discharges 8 kV air discharges	6 kV contact discharges 8 kV air discharges

(1) If you are mounting a CompactLogix™ 5370 L1 controller on a EN 50 022 - 35 x 15 mm (1.38 x 0.59 in.) DIN rail, you must first adhere a bumper on the back of the controller. Failure to install the bumper before mounting the controller results in the system failing to meet this specification. For more information, see the CompactLogix 5370 Controllers User Manual, publication 1769-UM021.

(2) If you are mounting a CompactLogix 5370 L1 controller on a EN 50 022 - 35 x 15 mm (1.38 x 0.59 in.) DIN rail, the Shock, nonoperating specification = 30 g.

Table 1 - Environmental Specifications - 1768 and 1769 CompactLogix Controllers and CompactLogix 5370 Controllers

Attribute	1769-L16ER-BB1B, 1769-L18ER-BB1B, 1769-L18ERM-BB1B	1769-L24ER-QB1B, 1769-L24ER-QBFC1B, 1769-L27ERM-QBFC1B	1769-L30ER, 1769-L30ER-NSE, 1769-L30ERM, 1769-L33ER, 1769-L33ERM, 1769-L36ERM	1769-L23-QBFC1B, 1769-L23E-QB1B, 1769-L23E-QBFC1B	1769-L31, 1769-L32C, 1769-L35CR, 1769-L32E, 1769-L35E	1768-L43, 1768-L43S, 1768-L45, 1768-L45S
Radiated RF immunity IEC 61000-4-3	10V/m with 1 kHz sine-wave 80% AM from 80…2000 MHz 10V/m with 200 Hz 50% Pulse 100% AM @ 900 MHz 10V/m with 200 Hz 50% Pulse 100% AM @ 1890 MHz 10V/m with 1 kHz sine-wave 80% AM from 2000…2700 MHz			10V/m with 200 Hz 50% Pulse 100% AM at 900 MHz 10V/m with 200 Hz 50% Pulse 100% AM at 1890 MHz 10V/m with 1 kHz sine-wave 80% AM from 80…2000 MHz 10V/m with 1 kHz sine-wave 80% AM from 2000…2700 MHz	1769-L31, 1769-L32C, 1769-L35CR 10V/m with 1 kHz sine-wave 80% AM from 80…2000 MHz 10V/m with 200 Hz 50% Pulse 100% AM @ 900 MHz 10V/m with 200 Hz 50% Pulse 100% AM @ 1890 MHz 1769-L32E, 1769-L35E 10V/m with 1 kHz sine-wave 80% AM from 80…2000 MHz 10V/m with 200 Hz 50% Pulse 100% AM @ 900 MHz 10V/m with 200 Hz 50% Pulse 100% AM @ 1890 MHz 3V/m with 1 kHz sine-wave 80% AM from 2000…2700 MHz	10V/m with 1 kHz sine-wave 80% AM from 80…2000 MHz 10V/m with 200 Hz 50% Pulse 100% AM @ 900 MHz 10V/m with 200 Hz 50% Pulse 100% AM @ 1890 MHz 3V/m with 1 kHz sine-wave 80% AM from 2000…2700 MHz
EFT/B immunity IEC 61000-4-4	±3 kV at 5 kHz on power ports ±3 kV at 5 kHz on signal ports ±3 kV at 5 kHz on communication ports		±3 kV at 5 kHz on communication ports	±2 kV at 5 kHz on power ports ±2 kV at 5 kHz on signal ports ±2 kV at 5 kHz on communication ports	1769-L31, 1769-L32C, 1769-L35CR ±2 kV at 5 kHz on communication ports 1769-L32E, 1769-L35E ±3 kV at 5 kHz on power ports ±3 kV at 5 kHz on communication ports	±4 kV at 5 kHz on communication ports
Surge transient immunity IEC 61000-4-5	± 1 kV line-line (DM) and ± 2 kV line-earth (CM) on power ports ± 1 kV line-line (DM) and ± 2 kV line-earth (CM) on signal ports ±2 kV line-earth (CM) on communication ports	±1 kV line-line (DM) and ±2 kV line-earth (CM) on power ports ±1 kV line-line (DM) and ±2 kV line-earth (CM) on signal ports ±2 kV line-earth (CM) on shielded ports ±2 kV line-earth (CM) on communication ports	±2 kV line-earth (CM) on communication ports	±1 kV line-line (DM) and ±2 kV line-earth (CM) on power ports ±1 kV line-line (DM) and ±2 kV line-earth (CM) on signal ports ±2 kV line-earth (CM) on shielded ports ±2 kV line-earth (CM) on communication ports	1769-L31 Channel 0: ±2 kV line-earth (CM) on shielded ports Channel 1: ±1 kV line-earth (CM) on shielded ports 1769-L32C, 1769-L35CR, 1769-L32E, 1769-L35E ±2 kV line-earth (CM) on communication ports	±2 kV line-earth (CM) on communication ports
Conducted RF immunity IEC 61000-4-6	10Vrms with 1 kHz sine-wave 80% AM from 150 kHz…80 MHz					

(1) If you are mounting a CompactLogix 5370 L1 controller on a EN 50 022 - 35 x 15 mm (1.38 x 0.59 in.) DIN rail, you must first adhere a bumper on the back of the controller. Failure to install the bumper before mounting the controller results in the system failing to meet this specification. For more information, see the CompactLogix 5370 Controllers User Manual, publication 1769-UM021.

(2) If you are mounting a CompactLogix 5370 L1 controller on a EN 50 022 - 35 x 15 mm (1.38 x 0.59 in.) DIN rail, the Shock, nonoperating specification = 30 g.

CompactLogix 5370 Controllers

CompactLogix 5370 L1 Control System

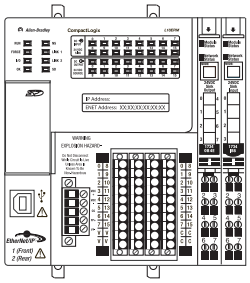

CompactLogix 5370 L2 Control System

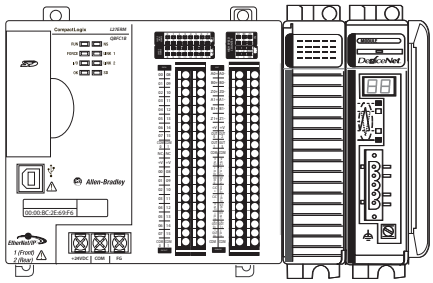

CompactLogix 5370 L3 Control System

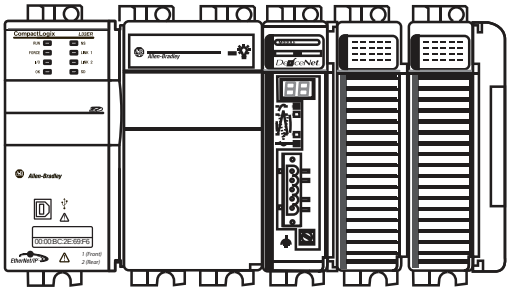

CompactLogix 5370 controllers provide scalable controller solutions capable of addressing a wide variety of applications. All CompactLogix 5370 controllers provide the following functionality:

- Two EtherNet/IP ports
- One USB port
- Support for local expansion modules
- Control of local and distributed I/O modules
- Use of 1784-SD1 or 1784-SD2 Secure Digital (SD) card for nonvolatile memory
- Internal energy storage solution eliminating the need for a battery

Some CompactLogix 5370 controllers provide the following functionality:

- Built-in power supply
- Some combination of embedded digital, analog and high-speed counter modules
- Support for Integrated Motion over an EtherNet/IP network
- Access to DeviceNet networks

Table 2 - Features - CompactLogix 5370 Controllers

Feature	1769-L16ER-BB1B, 1769-L18ER-BB1B, 1769-L18ERM-BB1B	1769-L24ER-QB1B, 1769-L24ER-QBFC1B, 1769-L27ERM-QBFC1B	1769-L30ER, 1769-L30ER-NSE, 1769-L30ERM, 1769-L33ER, 1769-L33ERM, 1769-L36ERM
Controller tasks: • Continuous • Periodic	• 32 tasks • 100 programs/task		
Built-in communication ports	• Two EtherNet/IP ports - CompactLogix 5370 controllers have two EtherNet/IP ports to connect to an EtherNet/IP network. The ports carry the same network traffic as part of the controller's embedded switch. However, the controller uses only one IP address. • One USB port (for temporary connection only)		
Communication options	EtherNet/IP	• EtherNet/IP • DeviceNet via 1769-SDN scanner module	
EtherNet/IP node, max	• 1769-L16ER-BB1B: Up to four nodes • 1769-L18ER-BB1B, 1769-L18ERM-BB1B: Up to 8 nodes	• 1769-L24ER-QB1B, 1769-L24ER-QBFC1B: Up to 8 nodes • 1769-L27ERM-QBFC1B: Up to 16 nodes	• 1769-L30ER, 1769-L30ER-NSE, 1769-L30ERM: Up to 16 nodes • 1769-L33ER, 1769-L33ERM: Up to 32 nodes • 1769-L36ERM: Up to 48 nodes
Controller connections	256		
Embedded I/O modules	• 16 DC digital inputs • 16 DC digital outputs	All controllers: • 16 DC digital inputs • 16 DC digital outputs 1769-L24ER-QBFC1B and 1769-L27ERM-QBFC1B only: • 4 high-speed counters • 4 high-speed counter outputs • 4 universal analog inputs • 2 analog output points	None

Table 2 - Features - CompactLogix 5370 Controllers

Feature	1769-L16ER-BB1B, 1769-L18ER-BB1B, 1769-L18ERM-BB1B	1769-L24ER-QB1B, 1769-L24ER-QBFC1B, 1769-L27ERM-QBFC1B	1769-L30ER, 1769-L30ER-NSE, 1769-L30ERM, 1769-L33ER, 1769-L33ERM, 1769-L36ERM
Sockets, max	32		
Integrated Motion over an EtherNet/IP network	1769-L18ERM-BB1B - 1 or 2 axes	1769-L27ERM-QBFC1B - As many as 4 axes	• 1769-L30ERM - As many as 4 axes • 1769-L33ERM - As many as 8 axes • 1769-L36ERM - As many as 16 axes
Programming languages	• Relay ladder • Structured text • Function block • SFC		

Table 3 - Technical Specifications - CompactLogix 5370 Controllers

Attribute	1769-L16ER-BB1B, 1769-L18ER-BB1B, 1769-L18ERM-BB1B	1769-L24ER-QB1B, 1769-L24ER-QBFC1B, 1769-L27ERM-QBFC1B	1769-L30ER, 1769-L30ER-NSE, 1769-L30ERM, 1769-L33ER, 1769-L33ERM, 1769-L36ERM
User memory	• 1769-L16ER: 384 KB • 1769-L18ER, 1769-L18ERM: 512 KB	• 1769-L24ER-QB1B, 1769-L24ER-QBFC1B: 750 KB • 1769-L27ERM-QBFC1B: 1 MB	• 1769-L30ER, 1769-L30ER-NSE, 1769-L30ERM: 1MB • 1769-L33ER, 1769-L33ERM: 2 MB • 1769-L36ERM: 3 MB
Optional nonvolatile memory	1784-SD1 card with 1 Gb of available memory (shipped with controller) 1784-SD2 card with 2 Gb of available memory (available for separate ordering)		
Number of local expansion modules, max[1]	• 1769-L16ER-BB1B: Six 1734 POINT I/O™ modules • 1769-L18ER-BB1B, 1769-L18ERM-BB1B: Eight 1734 POINT I/O modules	Four 1769 Compact I/O modules	• 1769-L30ER, 1769-L30ER-NSE, 1769-L30ERM: Eight 1769 Compact I/O™ modules • 1769-L33ER, 1769-L33ERM: Sixteen 1769 Compact I/O modules • 1769-L36ERM: Thirty 1769 Compact I/O modules
Number of I/O module banks, max	NA	1	3
Current draw @ 5V DC, controller power	1 A	• 1769-L24ER-QB1B: 1.54 A Value rated at the following ambient temperatures: 40 °C (104 °F), 55 °C (131 °F), 60 °C (140 °F). • 1769-L24ER-QBFC1B and 1769-L27ERM-QBFC1B: 1 A Value rated at the following ambient temperatures: 40 °C (104 °F), 55 °C (131 °F), 60 °C (140 °F).	500 mA
Current draw @ 24V DC, controller power	NA	• 1769-L24ER-QB1B: 0.95A Value rated at the following ambient temperatures: 40 °C (104 °F), 55 °C (131 °F), 60 °C (140 °F). • 1769-L24ER-QBFC1B and 1769-L27ERM-QBFC1B: 0.8 A Value rated at the following ambient temperatures: 40 °C (104 °F), 55 °C (131 °F), 60 °C (140 °F).	225 mA
Current draw @ 24V DC, field power, max	3 A - Combined total for all devices drawing current from field power connections Input: 5mA Output: 500mA	NA	NA
Power dissipation, max	12 W	• 1769-L24ER-QB1B: 12 W • 1769-L24ER-QBFC1B, L27ERM-QBFC1B: 21 W	4.5 W
Isolation voltage	50V (continuous), Basic Insulation Type Tested at 500V AC for 60 s, System to Field	30V (continuous), Basic Insulation Type, USB to system, Ethernet to system and Ethernet to Ethernet Type tested at 500V AC for 60 s	
Short circuit protection, field power	Internal fuse, Non-replaceable	NA	NA
Recommended external short circuit protection, field power	User-provided 4…6 A @ 52.5…68.25 $A2^t$ fuse	NA	NA

Table 3 - Technical Specifications - CompactLogix 5370 Controllers

Attribute	1769-L16ER-BB1B, 1769-L18ER-BB1B, 1769-L18ERM-BB1B	1769-L24ER-QB1B, 1769-L24ER-QBFC1B, 1769-L27ERM-QBFC1B	1769-L30ER, 1769-L30ER-NSE, 1769-L30ERM, 1769-L33ER, 1769-L33ERM, 1769-L36ERM
Weight, approx	0.66 kg (1.5 lb)	• 1769-L24ER-QB1B = 0.63 kg (1.39 lb) • 1769-L24ER-QBFC1B and 1769-L27ERM-QBFC1B = 0.9 kg (1.9 lb)	0.31 kg (0.68 lb)
Module width	100.00 mm (3.94 in.)	1769-L24ER-QB1B = 115.00 mm (4.53 in.) 1769-L24ER-QBFC1B and 1769-L27ERM-QBFC1B = 140 mm (5.51 in.)	55.00 mm (2.17 in.)
Module location	DIN rail mount	DIN rail or panel mount	
Panel-mounting screw torque	NA	1.1…1.8 N•m (10…16 lb•in) - use M4 or #8 screws	
Embedded power supply	24V DC input, non-isolated	24V DC Input, isolated	1769-PA2, 1769-PB2, 1769-PA4, 1769-PB4
Power supply distance rating	NA		• Controller and 1769-SDN: 4 • 1769 Compact I/O modules: 4…8, depending on module
Wire category(2)	1 - signal ports 1 - power ports 2 - communication ports		2 - communication ports
Wire type, Ethernet	RJ-45 connector according to IEC 60603-7, 2 or 4 pair Category 5e minimum cable according to TIA 568-B.1 or Category 5 cable according to ISO/IEC 24702		
Wire type, power terminals and embedded I/O connections	Copper		NA
Wire size, power terminals(3)	0.051…3.31 mm^2 (30…12 AWG) solid or stranded copper wire rated at 75 °C (167 °F), or greater, 1.2 mm (3/64 in.) insulation, max Each terminal accepts 1 or 2 wires	0.25…2.50 mm^2 (22...14 AWG) solid copper wire rated at 75 °C (167 °F), or greater 1.2 mm (3/64 in.) insulation, max Each terminal accepts only 1 wire	NA
Wire stripping length, power terminals(3)	10 mm (0.39 in)	8 mm (0.31 in)	NA
Screw torque, power terminals (3)	0.5…0.6 N•m (4.4…5.3 lb•in)	1.0…1.2 N•m (8.9…10.6 lb•in)	NA
Wire size, embedded I/O connections	0.205…1.31 mm^2 (24…16 AWG) solid or stranded copper wire rated at 75 °C (167 °F), or greater 1.2 mm (3/64 in.) insulation, max or 90 °C (194 °F) Each terminal accepts only 1 wire		NA
Wire stripping length, embedded I/O connections	10 mm (0.39 in)		NA
North American temperature code	T4A	T3C	T5
IEC temperature code	T4		T5
Enclosure type rating	None (open-style)		

(1) You can use up to the maximum number of local expansion modules with the CompactLogix 5370 L1 controllers listed as long as the total current drawn by the embedded I/O and local expansion modules does not exceed both the available POINTBus backplane current of 1 A and the field power current of 3 A. For more information on POINTBus backplane current and field power current considerations when installing local expansion modules, see page 9.

(2) Use this Conductor Category information for planning conductor routing. Refer to Industrial Automation Wiring and Grounding Guidelines, publication 1770-4.1 and the appropriate system-level installation manual.

(3) With respect to the CompactLogix 5370 L1 controllers, this specification applies to connecting wires to the power connector that is inserted in the controller. With respect to the CompactLogix 5370 L2 controllers, this specification applies to connecting wires to power terminals built into the controller.

Real-time Clock Accuracy

The following table lists the real-time clock accuracy specifications for the CompactLogix 5370 controllers.

Ambient Temperature	Accuracy
0° C (32° F)	-143…42 s/mo
25° C (77° F)	-78…91 s/mo
40° C (104° F)	-101…73 s/mo
60° C (140° F)	-204…-4.50 s/mo

Real-time Clock Hold-up Times

The following table lists the typical real-time clock hold-up specifications for the CompactLogix 5370 controllers.

IMPORTANT The values in the following table are typical and might vary with some CompactLogix 5370 control systems.

Ambient Temperature	Holdup Time, Typical
0 °C (32 °F)	40 days
25 °C (77 °F)	35 days
40 °C (104 °F)	28 days
60 °C (140 °F)	16 days

The I/O module support for CompactLogix 5370 controller systems varies by controller.

I/O Module Support - CompactLogix 5370 L1 Controllers

The CompactLogix 5370 L1 controllers offer an embedded I/O module and the option of using 1734 POINT I/O modules as local expansion modules.

The embedded I/O module provides the following:

- 16 sinking 24V DC digital input points
- 16 sourcing 24V DC digital output points

To use 1734 POINT I/O modules as local expansion modules, keep in mind the following:

- Local expansion modules must be installed in the same system as the CompactLogix 5370 L1 controller.
- The modules are installed to the right of the controller.
- The maximum number of local expansion modules available depends on the controller catalog of that system.

Table 4 lists the number of 1734 POINT I/O modules the CompactLogix 5370 L1 controllers support. Each I/O module's minimum RPI is 1.0 ms and can be changed by 0.5 ms increments.

Table 4 - 1769-L16ER-BB1B, 1769-L18ER-BB1B, 1769-L18ERM-BB1B Controllers - Local I/O Module Support

Cat. No.	Local 1734 POINT I/O Modules Supported, max
1769-L16ER-BB1B	6
1769-L18ER-BB1B	8
1769-L18ERM-BB1B	

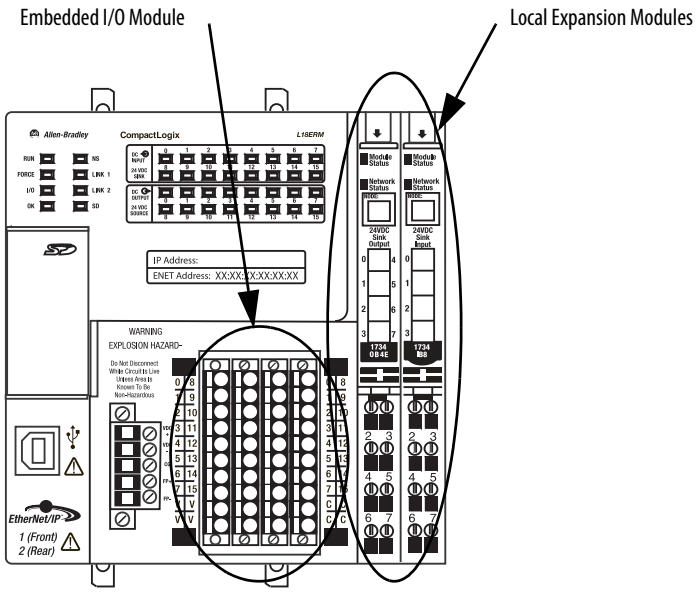

You can use up to the maximum number of 1734 POINT I/O modules with the CompactLogix 5370 L1 controllers listed in Table 4, as long as the total current drawn by the embedded I/O and local expansion modules does not exceed both the available POINTBus backplane current of 1 A and the field power current of 3 A.

Depending on your application's configuration, you can use one of the following devices to make additional POINTBus backplane current and/or field power current available:

- **1734-EP24DC POINT I/O Expansion Power Supply** - An expansion power supply is installed between embedded I/O modules and local expansion modules or between local expansion modules.

  The expansion power supply breaks the available POINTBus backplane current between the modules to its left and right. With the expansion power supply installed, the modules to its left can draw up to 1 A of POINTBus backplane current and the modules to its right can draw as much current as that provided by the expansion power supply.

  Additionally, the expansion power supply breaks the available field power current between the modules to its left and right With the expansion power supply installed, the modules to its left can draw up to 3 A of field power current and the modules to its right can draw as much field power current as allowed by the expansion power supply.

  For more information on the 1734-EP24DC expansion power supply, see the POINT I/O 24V DC Expansion Power Supply Installation Instructions, publication 1734-IN058.

- **1734-FPD POINT I/O Field Power Distributor Module** - A field power distributor module can also be installed between embedded I/O modules and local expansion modules or between local expansion modules.

  The field power distributor module breaks the available field power current between the modules to its left and right. With the field power distributor module installed, the modules to its left can draw up 3 A of field power current, and the modules to its right can draw as much field power current as allowed by the field power distributor.

  For more information on the 1734-FPD POINT I/O Field Power Distributor module, see the POINT I/O Field Power Distributor Module Installation Instructions, publication 1734-IN059.

IMPORTANT Remember, the field power distributor module only changes the level of field power current available in the system. It does not affect the level of POINTBus backplane current available.

CompactLogix 5370 L1 Controllers' Local I/O Performance

The requested packet interval (RPI) defines the frequency at which the controller sends data to and receives data from I/O modules. You set an RPI rate for each I/O module in your system.

CompactLogix 5370 L1 controllers always attempt to scan an I/O module at the configured RPI rate. For individual I/O modules, a Module RPI Overlap minor fault occurs if there are enough I/O modules with RPI rates set too fast that they cannot all be serviced in the allotted interval.

The specific configuration parameters for a system determine the impact on actual RPI rates. These configuration factors can impact the effective scan frequency for any individual module:

- Rates at which other 1734 POINT I/O modules' RPI rates are set
- Number of other 1734 POINT I/O modules in the system
- Types of other 1734 POINT I/O modules in the system
- Application user task priorities

In general, follow these guidelines when setting the RPI rates in a CompactLogix 5370 L1 control system:

- For **digital** modules:
  - 1...2 modules can be scanned in 2 ms.
  - 3...4 modules can be scanned in 4 ms.
  - 5...8 modules can be scanned in 8 ms.

IMPORTANT	When considering digital I/O modules, remember that they can be the embedded I/O module on the controller or 1734 POINT I/O modules used as local expansion modules. Therefore, the consideration for using two modules can be the embedded I/O module and a 1734 POINT I/O module or two 1734 POINT I/O modules.

- For **specialty and analog** modules (except 1734-485ASC modules):
  - 1 module can be scanned at 20 ms.
  - For each additional module add 20 ms.

  For example, if a CompactLogix 5370 L1 control system uses two analog modules, the module can be scanned in 40 ms.

- For **1734-485ASC** modules, the sum total data size for all ASC modules determines the RPI rates:
  - For total data size less than 20 bytes, each module can be scanned in 20 ms.
  - For data size greater than 20 bytes, use the size value as the RPI.

  For example, if the total data size is 40 bytes, each ASC module can be scanned in 40 ms.

You are not required to set individual 1734 POINT I/O modules' RPI values to the values listed above. For example, if your application scans one or two modules, you do not have to use RPI rates of 2 ms. Remember, though, that higher RPI rates result in scanning the data less frequently.

The RPI shows how quickly modules can be scanned, not how quickly an application can use the data. The RPI is asynchronous to the program scan. Other factors, such as program execution duration, affect I/O throughput.

Table 5 - Embedded DC Input Specifications

Attribute	1769-L16ER-BB1B, 1769-L18ER-BB1B, 1769-L18ERM-BB1B
Inputs	16
Voltage category	24V DC sink
Operating voltage range	10…28.8V DC 24V DC nom
Digital filter, off to on	0.5 ms hardware plus 0…65 ms (user selectable)
Input delay, off to on	
Digital filter, on to off	0.5 ms hardware plus 0…65 ms (user selectable)
Input delay, on to off	
Off-state voltage, max	5V DC
Off-state current, max	1.5 mA
On-state current, min	2 mA @ 24V DC
Input impedance, max	4.7 kΩ
Cyclic update time	1 ms…750 ms
Isolation voltage	50V DC (continuous), Basic Insulation Type Tested at 500V AC for 60 s, system to field No isolation between individual channels
IEC input compatibility	Type 3
Isolated groups	None

Table 6 - Embedded DC Output Specifications

Attribute	1769-L16ER-BB1B, 1769-L18ER-BB1B, 1769-L18ERM-BB1B
Outputs	16
Voltage category	24V DC source
Operating voltage range	10…28.8V DC 24V DC nom
Output delay, off to on	0.1 ms
Output delay, on to off	0.1 ms
Off-state leakage current, max	0.5 mA @ 24V DC
On-state current, min	1 mA per channel
On-state voltage drop, max	0.6V DC
Current per point, max	0.5 A
Current per module, max	3 A
Surge current per point, max	1 A for 100 ms per point, repeatable every 2 s
Isolation voltage	50V DC (continuous), Basic Insulation Type Tested at 500V AC for 60 s, system to field No isolation between individual channels
Isolated groups	None
Pilot duty rating	0.5 A

Table 7 - Embedded Power Supply

Attribute	1769-L16ER-BB1B, 1769-L18ER-BB1B, 1769-L18ERM-BB1B
Input voltage range	10…28.8V DC
Input voltage, nom	24V DC
Line requirement (VDC), min	50VA, Class 2/SELV
Available 5V DC POINTBus backplane current	1 A @ 5V DC
Inrush, max	15 A
Line loss ride through	10 ms…10 s
Output bus current capacity, max	0.1 …3 A @ 5V DC
Load current, min	300 mA
Short circuit protection	Internal fuse Not user replaceable
Overvoltage protection	Yes

I/O Module Support - CompactLogix 5370 L2 Controllers

The CompactLogix 5370 L2 controllers offer embedded I/O modules and the option of using 1769 Compact I/O modules as local expansion modules. The following table describes theembedded I/O modules and local expansion modules supported by CompactLogix 5370 L2 controllers.

Cat. No.	Embedded I/O Module Support						Local Expansion Modules Support
	Sinking/Sourcing 24V DC Digital Input Points	Sourcing 24V DC Digital Output Points	High-speed Counters	High-speed Counter Output Points	Universal Analog Input Points	Analog Output Points	1769 Compact I/O Modules
1769-L24ER-QB1B	16	16	-	-	-	-	As many as 4 modules
1769-L24ER-QBFC1B			4	4	4	2	
1769-L27ERM-QBFC1B							

IMPORTANT Remember the following when using the embedded I/O modules on CompactLogix 5370 L2 controllers:

- 1769-L24ER-QB1B controller - The digital input points and digital output points are located on a single embedded I/O module. Therefore, the 1769-L24ER-QB1B controller is considered to have one embedded I/O module.
- 1769-L24ER-QBFC1B and 1769-L27ERM-QBFC1B controllers - The digital input points and digital output points are located on a single embedded I/O module. The high-speed counter input output points, universal analog input points, and analog output points are located on another single embedded I/O module. Therefore, the 1769-L24ER-QBFC1B and 1769-L27ERM-QBFC1B controllers are considered to have two embedded I/O modules.

You configure an RPI rate for the embedded I/O modules to establish specific time intervals at which data is transmitted between the controller and the embedded I/O modules. The embedded I/O modules' available RPI range is 0.5…750.0 ms and can be changed by 0.5 ms increments. The default setting is 20 ms.

To use 1769 Compact I/O modules as local expansion modules, keep in mind the following:

- Local expansion modules must be installed in the same system as the CompactLogix 5370 L2 controller.
- Local expansion modules are installed to the right of the embedded I/O modules.
- You must install a 1769-ECR Compact I/O end cap on the right side of control system. The end cap can be installed on the right side of the embedded I/O modules or, if local expansion modules are used, on the right side of 1769 Compact I/O module.

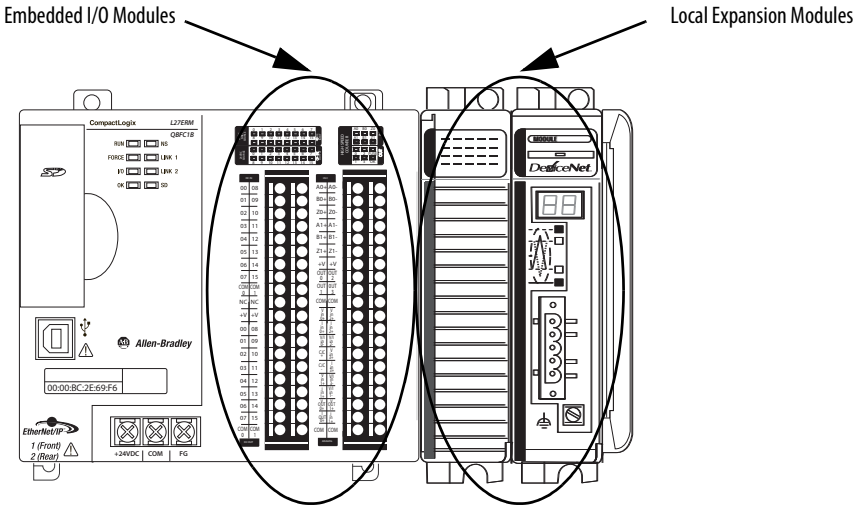

CompactLogix 5370 L2 Controllers' Local I/O Performance

The requested packet interval (RPI) defines the frequency at which the controller sends data to and receives data from I/O modules. In the programming software, you set an RPI rate for each I/O module in your system, including embedded I/O modules, local expansion modules, or distributed I/O modules over an EtherNet/IP network.

The CompactLogix 5370 L2 controllers always attempt to scan an I/O module at the configured RPI rate. The controller scans distributed I/O modules at the configured RPI rates.

With embedded I/O modules and local expansion modules, however, some specific system configuration parameters determine the actual rate at which the controller scans the modules. That is, the controller may be configured to scan an I/O module at one rate, but actually scan the module at a different rate.

For individual I/O modules, a Module RPI Overlap minor fault occurs if there is at least one I/O module that cannot be serviced within its RPI time.

The specific configuration parameters for a system determine the impact on actual RPI rates. These configuration factors can impact the effective scan frequency for any individual embedded or local expansion module:

- Rates at which embedded I/O modules' RPI values are set
- Number of embedded I/O modules used in the system
- Types of embedded I/O modules used in the system
- Rates at which 1769 Compact I/O modules' RPI values are set
- Number of 1769 Compact I/O modules in the system
- Types of 1769 Compact I/O modules in the system
- Application user task priorities

Table 8 describes RPI rate guidelines.

Table 8 - RPI Rate Guidelines

Type of Module	Guidelines
Digital and analog (any mix)	The following guidelines apply: • 1…2 modules can be scanned in 0.5 ms. • 3…4 modules can be scanned in 1 ms. • 5…6 modules can be scanned in 2 ms. • Some input modules have a fixed 8 ms filter, so selecting a faster RPI has no effect.
Specialty	The following conditions apply: • For every full-sized 1769-SDN module in the system, increase every other module's RPI by 2 ms. • For every 1769-HSC module in the system, increase every other module's RPI by 1 ms. • For every full-sized 1769-ASCII module system, increase every other module's RPI by 1 ms. • For every 1769-SM2 module in the system, increase every other module's RPI by 2 ms. For example, if the system includes four I/O modules configured with an RPI = 1 ms and you add a 1769-SDN module to the system, you should increase the RPI value for all four I/O modules by 2 ms. Therefore, when the 1769-SDN module is added to the system, the four I/O modules should use an RPI = 3 ms. If, in the same system, you add a second 1769-SDN module, the four I/O modules' RPI value should be increased to 5 ms.

IMPORTANT When considering the number of I/O modules, remember that they can be the embedded I/O modules on the controller or 1769 Compact I/O modules used as local expansion modules.

Therefore, the consideration for using modules can be any of the following system configurations:

- Embedded I/O modules only
- 1769 Compact I/O modules only
- Some combination of embedded I/O modules and 1769 Compact I/O modules

You can set individual 1769 Compact I/O modules' RPI rates higher than those listed in Table 8. The RPI shows how quickly modules can be scanned, not how quickly an application can use the data. The RPI is asynchronous to the program scan. Other factors, such as program execution duration, affect I/O throughput.

ITEM 536E

POINT I/O™

1734sc-IF4u 4-Channel Universal Analog Input Module

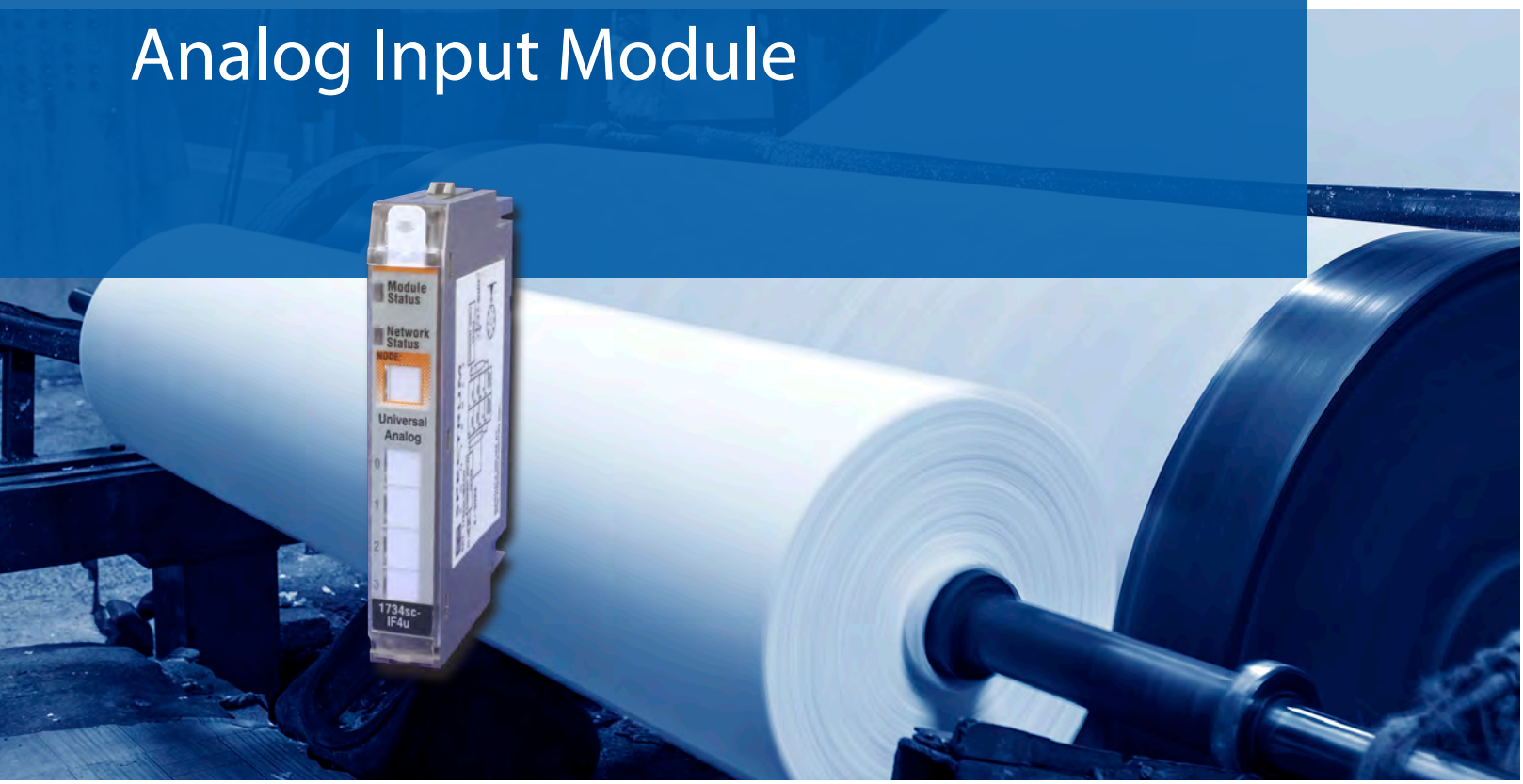

The 1734sc-IF4u Input Module provides full universal analog input capability in one I/O module. The 1734sc-IF4u module can relace analog input, thermocouple, and RTD modules without compromising performance or price.

Reduce System Costs

The 1734sc-I4Fu module maximizes your system performance by combining real-time HART data acquisition with standard analog acquisition and control—at a fraction of the cost. Simplify commissioning, operation, and maintenance of your HART devices. You may use the data as the foundation of your asset management system.

- Four channels of voltage, current, or three thermocouple, or two RTD/resistance inputs.
- Use any combination of input types at one time.
- Accuracy comparable with dedicated analog modules.
- Individually programmable for each channel.
- Easy to configure using RSLogix programming software.
- Channel-selectable filtering for fastest analog update time and noise rejection.
- Cold junction compensation included for thermocouples.

1734sc-I4Fu Specifications

Input Types	4 V, C, or 3 TC, or 2 RTD, Resistance
Input Ranges	
Thermocouple	J, K, T, B, E, R, S, N, C
RTD	PT385/3916, Ni618/672, NiFe518, Cu426
Resistance	0-150, 0-1000, 0-3000 ohms
Current	0-20 mA, 4-20 mA
Voltage	±50 mV, ±100 mV, 0-5 V, 1-5 V, 0-10 V, ±10 V
Resolution	16 bits
Advanced Features	6 filter frequencies (individually selectable by channel)

Update Times (ms) *	4 Hz	17 Hz	62 Hz	470 Hz
4-Channel Sample Time (ms)	512	153	65	37

* with TC, update times may be longer

Electrical Isolation (continuous)	50 VDC field-wiring-to-backplane; 50 VDC field-wiring-to-chassis-ground; 10 VDC channel-to-channel isolation.
Input Impedance	253 ohm, current; 10.4 Mohm, voltage, thermocouple, RTD
Input Overvoltage Protection	+24 VDC continuous
Input Overcurrent Protection	32 mA continuous
Backplane Current Required	15 mA at 5 V maximum , 20 mA at 24 V maximum
Common Mode Rejection	<96 dB at 50/60 Hz
Normal Mode Rejection	65 dB to 74 dB at 50/60 Hz
Environmental Conditions	
Operational Temperature	-0 °C - 60 °C (-4 °F - 140 °F)
Storage Temperature	-40 °C - 85 °C (-40 °F - 185 °F)
Relative Humidity	5% - 95% (non-condensing)
Thermal Dissipation	1.00 Watt, maximum
Accuracy	
Voltage/Current	0.10% of full scale
Thermocouple	0.25% of full scale
RTD	0.30% of full scale from 0 °C to 300 °C
Certifications	UL/cUL Listed ANSI ISA 12.12.01 (Class I, Div 2, Groups ABCD), CE
Weight	40 g (1.41 ozs)
Terminal Base	1734-TB/1734-TBS

SPECTRUM CONTROLS
425-746-9481
www.spectrumcontrols.com
1705 132nd AVE NE | Bellevue | WA 98005
spectrum@spectrumcontrols.com

Rockwell Automation
Encompass™ Product Partner
Global

Select a Terminal Base Assembly

Step 3 - Select:

- the appropriate terminal base unit for your module

Terminal Base Assembly ..... page 47
One-piece Terminal Bases ..... page 49

The POINT I/O system follows a No Tools design approach. The I/O mounting base, removable terminal block (RTB), and I/O module may be assembled as a system without tools.

Terminal Base Assembly

The POINT I/O mounting base mounts directly on the DIN-rail, either vertically or horizontally, and forms the interconnect for the POINTBus backplane communication and field power-bus distribution. The mechanical keying of the mounting base prevents incorrect module placement. The I/O mounting base and removable terminal block are sold together (pre-assembled) as a single unit called a Terminal Base Assembly.

The pins on the 1734-TB terminal base assembly are independent of each other. The connections for the 1734-TB and 1734-TB3 are determined by the 1734 module being used.

Terminal Base Pins

1734-TB, -TBS, -TOP, -TOPS

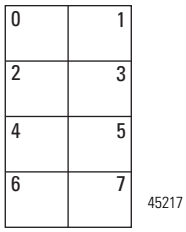

1734-TB3, -TB3S, -TOP3, -TOP3S

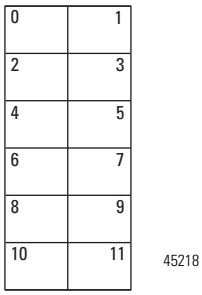

Pins 4, 5, 8, and 9 are connected together.
Pins 6, 7, 10, and 11 are connected together.

Each assembly includes a removable terminal block (RTB) provides 8 or 12 separate terminal locations for field wiring. The RTB also provides vertical access to wire and screw terminations. A separate terminal point is provided for each wire, including a shield ground terminal point for 2-point analog modules.

POINT I/O Removable Terminal Base Assembly

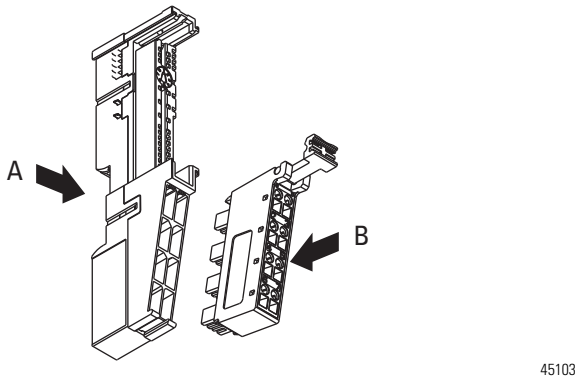

Each terminal base assembly includes a base (A) that mounts onto the DIN-rail and a removable terminal block (B) for I/O wiring.

Once the RTB is wired properly, you never need to rewire terminations. The RTB separates independently of the I/O mounting base and I/O module to facilitate rapid installation and commissioning of the system. Each terminal is numbered on the bottom of the RTB to simplify troubleshooting during commissioning or maintenance cycles. Spare or replacement RTBs can be ordered separate from the terminal base assembly.

Terminal Base Assemblies

Terminal Base Assembly Cat. No.	Description	Terminal Base Screw Torque	Replacement RTB Cat. No.
1734-TB	Mounting base with 8-terminal cage-clamp RTB	0.6 Nm (7 lb-in)	1734-RTB
1734-TBS	Mounting base with 8-terminal spring-clamp RTB		1734-RTBS
1734-TB3	Mounting base with 12-terminal cage-clamp RTB		1734-RTB3
1734-TB3S	Mounting base with 12-terminal spring-clamp RTB		1734-RTB3S
1734-TBCJC(1)	Mounting base with cold-junction compensation RTB	0.5…0.6 Nm (5…7 lb-in)	1734-RTBCJC(1)

(1) For use with the 1734-IT2I thermocouple input module.

ITEM 701D

Product data sheet
Characteristics

HDL26050
PowerPact H Circuit Breaker,ThermMagn,50A,2P,600V,14kA

Main

Product or component type	Circuit breaker
Range of product	PowerPact H
Trip Unit Type	Thermal-magnetic
Breaking capacity code	D

Complementary

Line Rated Current	50 A
Number of Poles	2P
Interrupt Rating	18 kA at 480 V AC 25 kA at 240 V AC 14 kA at 600 V AC 20 kA at 250 V DC
System Voltage	250 V DC 600 V AC
Continuous current rating	80 %
Mounting mode	Unit mount
Electrical connection	Lugs load Lugs line
Wire Gauge	AWG 14...AWG 3/0 (aluminium/copper)
Magnetic hold current	400 A
Magnetic tripping current	850 A
Height	6.4 in
Width	2.74 in
Depth	4.36 in

Environment

Product certifications	CE

Disclaimer: This documentation is not intended as a substitute for and is not to be used for determining suitability or reliability of these products for specific user applications

	CSA IEC UL listed
Ambient air temperature for operation	104 °F (40 °C)

Ordering and shipping details

Category	01110 - HD,JD UNIT MT BREAKER/SWITCH
Discount Schedule	DE2
GTIN	00785901461890
Nbr. of units in pkg.	1
Package weight(Lbs)	3.0300000000000002
Returnability	Y
Country of origin	MX

Offer Sustainability

Sustainable offer status	Green Premium product
RoHS (date code: YYWW)	Compliant - since 0832 - Schneider Electric declaration of conformity Schneider Electric declaration of conformity
REACh	Reference not containing SVHC above the threshold Reference not containing SVHC above the threshold
Product environmental profile	Available
Product end of life instructions	Need no specific recycling operations
California proposition 65	WARNING: This product can expose you to chemicals including:
- - - - - - - Substance 1	DINP, which is known to the State of California to cause cancer, and
- - - - - - - Substance 2	DIDP, which is known to the State of California to cause Birth Defects or other reproductive harm.
- - - - - - - More information	For more information go to www.p65warnings.ca.gov

Contractual warranty

Warranty period	18 months

ITEM 706D

Product data sheet
Characteristics

9421LJ4
Circuit breaker mechanism kit, contains operating mechanism, 6 inch handle and long shaft kit

Main

Range of product	9421L
Product or component type	Circuit Breaker Mechanism
Circuit Breaker Type	MG-NSF 250 A PowerPact H or J 250 A

Complementary

Enclosure Type	NEMA 1/3R/12 enclosure
Handle Length	6 in (152.40 mm)
Shaft Type	Long
Net Weight	6.68 lb(US) (3.03 kg)

Ordering and shipping details

Category	21731 - 9421 L & MISC
Discount Schedule	CP1
GTIN	00785901700463
Nbr. of units in pkg.	1
Package weight(Lbs)	6.67 lb(US) (3.03 kg)
Returnability	Yes
Country of origin	MX

Packing Units

Unit Type of Package 1	PCE
Package 1 Height	10.20 in (25.908 cm)
Package 1 width	10.80 in (27.432 cm)
Package 1 Length	20.30 in (51.562 cm)

Disclaimer: This documentation is not intended as a substitute for and is not to be used for determining suitability or reliability of these products for specific user applications

Offer Sustainability

REACh free of SVHC	Yes
EU RoHS Directive	Compliant EU RoHS Declaration
Mercury free	Yes
RoHS exemption information	Yes
China RoHS Regulation	China RoHS declaration Product out of China RoHS scope. Substance declaration for your information.
PVC free	Yes
Halogen content performance	Halogen free plastic parts product

Contractual warranty

Warranty	18 months

ITEM 710C

Product data sheet

9080LBA362106

Characteristics

Main

Range of product	9080LB
Product or component type	Power Distribution Block
[In] rated current	175 A for copper cable(s) 135 A for aluminium cable(s)
Short-circuit current	65 kA

Complementary

System Voltage	600 V AC/DC
Mounting support	Surface mount
Number of poles	3
Number of terminals	1 line 6 load
Number of cables	2 cable(s) AWG 14...AWG 2/0 (copper or aluminium) for line 6 cable(s) AWG 14...AWG 4 (copper or aluminium) for load
Electrical connection	Tin plated aluminium lugs
[Ics] rated service breaking capacity	Up to 100 kA per UL 508 A
Ambient air temperature for operation	-40...302 °F
Material	Phenolic block
Connections - terminals	Lug 40 lbf.in for AWG 8 (copper or aluminium) line Lug 120 lbf.in for AWG 6...AWG 2/0 (copper or aluminium) line Lug 35 lbf.in for AWG 14...AWG 10 (copper or aluminium) line Lug 35 lbf.in for AWG 14...AWG 4 (copper or aluminium) load
Wire stripping length	0.38 in top load connection 0.75 in bottom load connection 0.69 in line connection
Height	2.9 in
Width	5.38 in
Depth	2.06 in

Disclaimer: This documentation is not intended as a substitute for and is not to be used for determining suitability or reliability of these products for specific user applications

Environment

Product certifications	CE UL recognized E60616 CCN XCFR2 CSA file 70361 class 6228 01

Ordering and shipping details

Category	21711 - 9080 LB
Discount Schedule	CP1
GTIN	00785901132615
Nbr. of units in pkg.	1
Package weight(Lbs)	0.77000000000000002
Returnability	Y
Country of origin	US

Offer Sustainability

RoHS (date code: YYWW)	Compliant - since 0620 - Schneider Electric declaration of conformity Schneider Electric declaration of conformity
REACh	Reference not containing SVHC above the threshold Reference not containing SVHC above the threshold

Contractual warranty

Warranty period	18 months

ITEM 711C

Product data sheet
Characteristics

9080LB23
Power Distribution Block, cover for 9080LBA362 or 9080LBC362 blocks

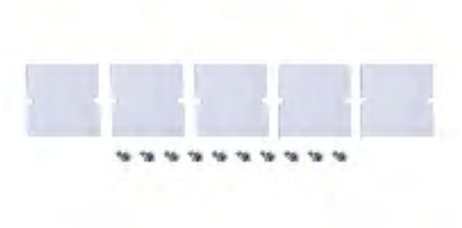

Main

Range of product	9080LB
Product or component type	Cover
Fixing mode	Screwed
Quantity per set	Set of 5

Complementary

Height	69.85 Mm (2.75 in)
Width	68.33 Mm (2.69 in)
Depth	1.52 Mm (0.06 in)

Ordering and shipping details

Category	21711 - 9080 LB
Discount Schedule	CP1
GTIN	00785901139317
Package weight(Lbs)	0.01 Kg (0.02 lb(US))
Returnability	Yes
Country of origin	US

Offer Sustainability

California proposition 65	WARNING: This product can expose you to chemicals including: Lead and lead compounds which is known to the State of California to cause Carcinogen & Reproductive-harm. For more information go to www.p65warnings.ca.gov
REACh Regulation	REACh Declaration
REACh free of SVHC	Yes
EU RoHS Directive	Compliant EU RoHS Declaration
Toxic heavy metal free	Yes

The information provided in this documentation contains general descriptions and/or technical characteristics of the performance of the products contained herein.
This documentation is not intended as a substitute for and is not to be used for determining suitability or reliability of these products for specific user applications.
It is the duty of any such user or integrator to perform the appropriate and complete risk analysis, evaluation and testing of the products with respect to the relevant specific application or use thereof.
Neither Schneider Electric Industries SAS nor any of its affiliates or subsidiaries shall be responsible or liable for misuse of the information contained herein. *Prices are indicative

Mercury free	Yes
RoHS exemption information	Yes
China RoHS Regulation	China RoHS Declaration

Contractual warranty

Warranty	18 months

Product Life Status : Commercialised

TRANSTECTOR
an INFINITE brand

AC Surge Protector SPD SP PLUS Brick 120, 240 Vac Split-Phase MOV 50 kA, UL 1449 4th Ed. Type 1 and Type 2, CE, RoHS

SP50-240SP
LEA SP PLUS 50

Features

- UL1449 4th Ed. Type 1/Type 2
- High Capacity MOV Protection
- Suppression Status LEDs
- Wall Mount
- No External Backup Fuses Required

Applications

- Electrical Panelboards
- Industrial Automation
- Communications Base Stations
- IT & Data Centers
- Switchgear
- Motor Control Centers
- Automatic Transfer Switches
- Wastewater Treatment
- Oil & Gas
- LED Lighting
- Schools
- Hospitals

Description

AC surge protector (also known as SPD or lightning protector) SP50-240SP from Transtector is a UL1449 4th Ed. Type 1/Type 2 brick style SPD that utilizes state of the art MOV technology to protect critical equipment that operates on a 120/240 Vac split-phase electrical service. This surge protector provides effective protection against electrical transient surges that are generated both by external lightning events and by internal switching events and supports long-term system reliability by safely shunting high amounts of transient energy while maintaining a very low clamping voltage. Transtector AC surge protectors are available in stock with same day shipping.

Electrical Specifications

Description	Minimum	Typical	Maximum	Units
Service Voltages		120/240		Vac
Service Type		Split-Phase		
Maximum Continuous Operating Voltage (MCOV)				
L - L			360	Vac
L - N			180	Vac

Surge Protection Specification

Description	Minimum	Typical	Maximum	Units
Surge Protection Technology		MOV		
Protection Modes		L-N, L-L		
8/20µs Surge Current			50	kA

Click the following link (or enter part number in “SEARCH” on website) to obtain additional part information including price, inventory and certifications:
AC Surge Protector SPD SP PLUS Brick 120, 240 Vac Split-Phase MOV 50 kA, UL 1449 4th Ed. Type 1 and Type 2, CE, RoHS SP50-240SP

SP50-240SP REV 1.0 | © 2019 Transtector, Inc., All Rights Reserved.
+1 208 635 6400 | Transtector.com

TRANSTECTOR
an INFINITE brand

AC Surge Protector SPD SP PLUS Brick 120, 240 Vac Split-Phase MOV 50 kA, UL 1449 4th Ed. Type 1 and Type 2, CE, RoHS

SP50-240SP
LEA SP PLUS 50

Nominal Discharge Current Rating (In)	20		kA
VPR 8/20µs			
L - L		1,200	Vpk
L - N		700	Vpk
Response Time		25	ns
SCCR (Short Circuit Current Rating)	200		kAIC

Mechanical Specifications

Size

Height	2.45 in	[62.23 mm]
Width	4.45 in	[113.03 mm]
Depth	5.71 in	[145.03 mm]
Weight	1.3 lbs	[589.67 g]
Housing Material and Plating	Plastic Enclosure	

Environmental Specifications

Temperature Range (Operational)	-40 to +85 deg C
Environmental Protection Rating	NEMA 4X
Humidity	90% non-condensing

Installation

Mount Type	Panel

Compliance Certifications

RoHS Compliant	Yes
CE Compliant	Yes
UL Compliant	Yes
Certifications	UL 1449 4th Ed. Type 1 and Type 2

Click the following link (or enter part number in “SEARCH” on website) to obtain additional part information including price, inventory and certifications:
AC Surge Protector SPD SP PLUS Brick 120, 240 Vac Split-Phase MOV 50 kA, UL 1449 4th Ed. Type 1 and Type 2, CE, RoHS SP50-240SP

SP50-240SP REV 1.0 | © 2019 Transtector, Inc., All Rights Reserved.

TRANSTECTOR
an INFINITE brand

AC Surge Protector SPD SP PLUS Brick 120, 240 Vac Split-Phase MOV 50 kA, UL 1449 4th Ed. Type 1 and Type 2, CE, RoHS

SP50-240SP
LEA SP PLUS 50

Transtector Systems specializes in protection of highly sensitive, low voltage equipment through its patented, non-degrading silicon diode technology and custom filters. Our power quality expertise translates into a diverse product offering including AC, DC, and signal applications as well as integrated cabinets, power distribution panels and EMP hardened devices.

Click the following link (or enter part number in “SEARCH” on website) to obtain additional part information including price, inventory and certifications: AC Surge Protector SPD SP PLUS Brick 120, 240 Vac Split-Phase MOV 50 kA, UL 1449 4th Ed. Type 1 and Type 2, CE, RoHS SP50-240SP

URL: https://www.transtector.com/ac-surge-protector-spd-sp-plus-brick-sp50-240sp-p.aspx

The information contained in this document is accurate to the best of our knowledge and representative of the part described herein. It may be necessary to make modifications to the part and/or the documentation of the part, in order to implement improvements. Transtector reserves the right to make such changes as required. Unless otherwise stated, all specifications are nominal. Transtector does not make any representation or warranty regarding the suitability of the part described herein for any particular purpose, and Transtector does not assume any liability arising out of the use of any part or documentation.

SP50-240SP REV 1.0 | © 2019 Transtector, Inc., All Rights Reserved.

ITEM 715B

AC Surge Protector SPD SP PLUS Brick 120, 240 Vac Split-Phase MOV
50 kA, UL 1449 4th Ed. Type 1 and Type 2, CE, RoHS

SP50-240SP CAD Drawing

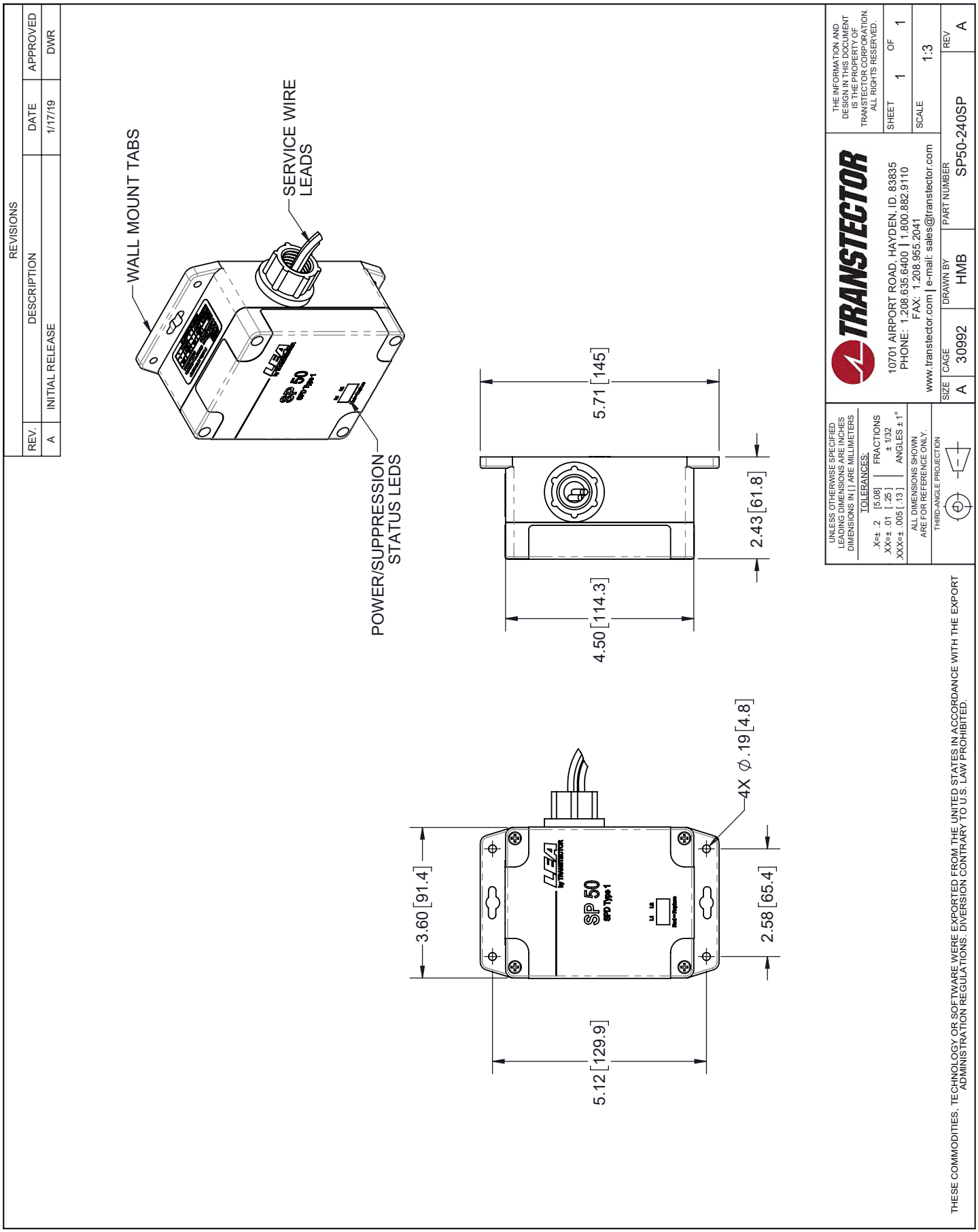

SP50-240SP REV 1.0 | © 2019 Transtector, Inc., All Rights Reserved.

Technical Data 1023

Effective October 2019
Supersedes October 2017

BUSSMANN SERIES

Low-Peak™ LP-CC Class CC 600 Vac/300 Vdc, 1/2-30 A time-delay fuses

RoHS

Catalog numbers (amps)				
LP-CC-1/2	LP-CC-1-1/2	LP-CC-3	LP-CC-6	LP-CC-12
LP-CC-6/10	LP-CC-1-6/10	LP-CC-3-2/10	LP-CC-6-1/4	LP-CC-15
LP-CC-8/10	LP-CC-1-8/10	LP-CC-3-1/2	LP-CC-7	LP-CC-20
LP-CC-1	LP-CC-2	LP-CC-4	LP-CC-7-1/2	LP-CC-25
LP-CC-1-1/8	LP-CC-2-1/4	LP-CC-4-1/2	LP-CC-8	LP-CC-30
LP-CC-1-1/4	LP-CC-2-1/2	LP-CC-5	LP-CC-9	
LP-CC-1-4/10	LP-CC-2-8/10	LP-CC-5-6/10	LP-CC-10	

Carton quantity:

Amp rating	Carton qty.
1/2-30	10

Dimensions - in (mm)

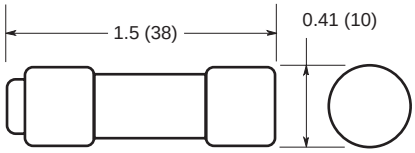

Catalog symbol:

- LP-CC-(amp)

Description:

Bussmann™ series Ultimate protection Low-Peak Class CC current-limiting, time-delay fuses. Time-delay – 12 seconds (minimum) at 200% of rated current.

Specifications:

Ratings

- Volts
  - 600 Vac
  - 300 Vdc (1/2 to 2-8/10 A, 20-30 A)
  - 150 Vdc (3-15 A)
- Amps 1/2-30 A
- IR
  - 200 kA Vac RMS Sym.
  - 20 kA Vdc

Agency information

- UL® Listed Class CC, Std. 248-4, Guide JDDZ, File E4273
- CSA® Certified; Class 1422-02, File 53787
- CE
- RoHS compliant

Features:

- 200 kA interrupting rating complies with NEC® Section 110.9 for today's large capacity systems.
- Fast short-circuit protection and dual-element, time-delay performance provide ultimate protection.
- Reduces existing fuse inventory by up to 33% when upgrading to Low-Peak fuses.
- Consistent 2:1 amp rating ratios for all Low-Peak fuses make selective coordination easy.
- Time-delay characteristic avoids unwanted fuse openings from surge currents while fast response speed under fault conditions provides a high degree of current limitation.
- Current-limitation protects downstream components against damaging thermal and magnetic effects of fault currents.
- A superior, all-purpose, space-saving branch circuit fuse that meets most protection requirements up to 30 A.
- Very compact physical size that's only 13/32" x 1-1/2" (10 x 38 mm) with rejction tip.
- Proper sizing can provide "No Damage" Type 2 coordinated protection for NEMA and IEC motor controllers.
- Can be used where either a time-delay or a fast-acting fuse is needed, making selection easier and reducing spare fuse inventories for substantial cost reduction.
- Superior protection for small horsepower motor circuits.

EATON
Powering Business Worldwide

Recommended fuse blocks and holders:

Fuse amps	1-pole	2-pole	3-pole
Modular open blocks			
up to 30	BCM603-1_	BCM603-2_	BCM603-3_
DIN-Rail holders			
Up to 30	CHCC1D_	CHCC2D_	CHCC3D_
	—	—	OPM-NG-_
	—	—	OPM-1038_
	—	—	OPM-1038_SW
Panel mount holders			
Up to 30	HPS-RR	—	—
	HPF-RR	—	—
In-line holders			
Up to 30	—	HEY	—
	HEZ	—	—

For additional information on Class CC fuse blocks and holders, see data sheets:

- Modular open blocks No. 10241 (BCM)
- DIN-Rail holders No. 10430 (CHCC), No. 1109 (OPM-NG), No. 1102 (OPM-1038), No. 1103 (OPM-1038_SW)
- Panel mount holders No. 2113 (HPS), No. 2114 (HPF)
- In-line holders No. 2126 (HEY), No. 2130 (HEZ)

Time-current curves - average melt:

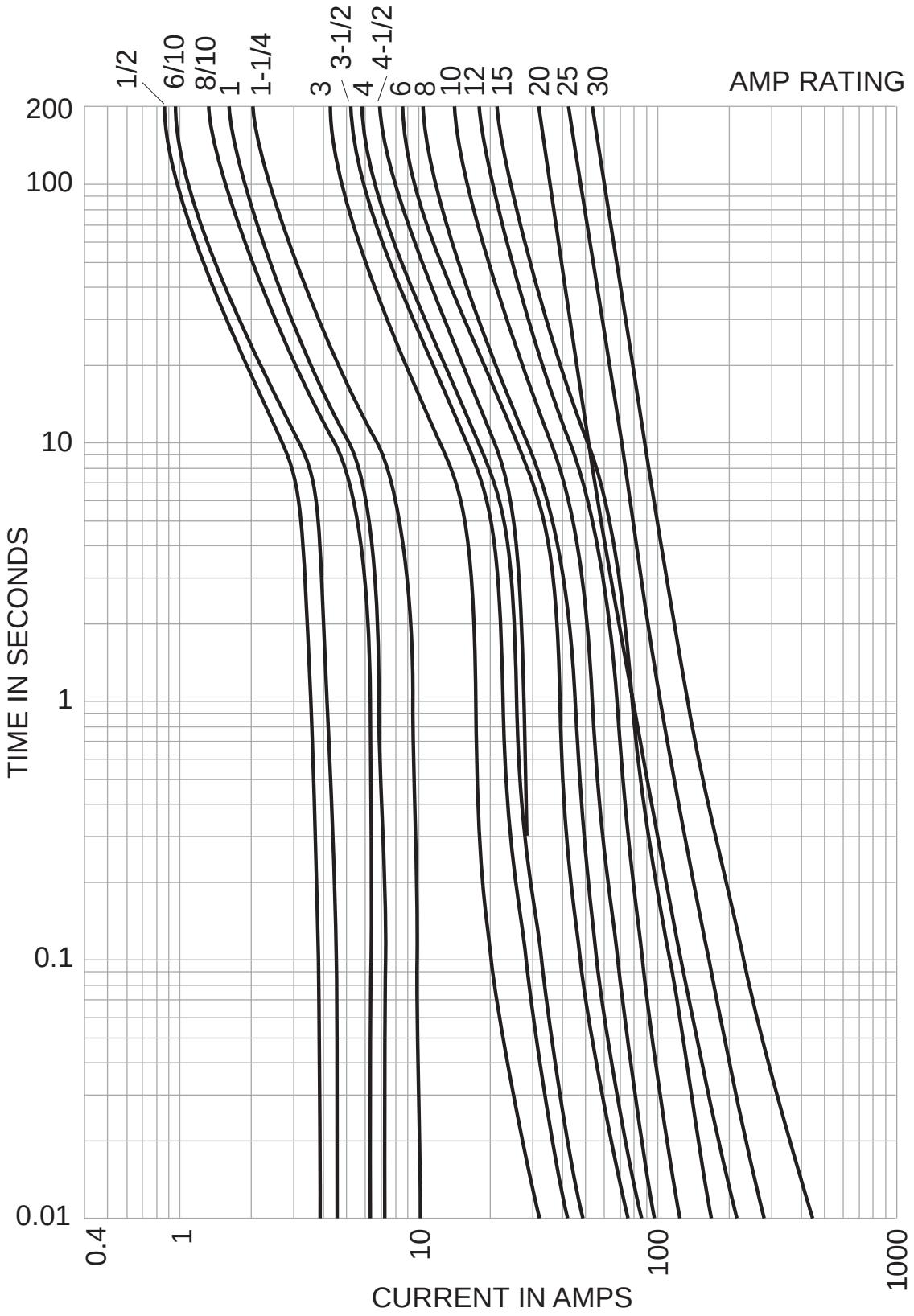

Current-limitation curves:

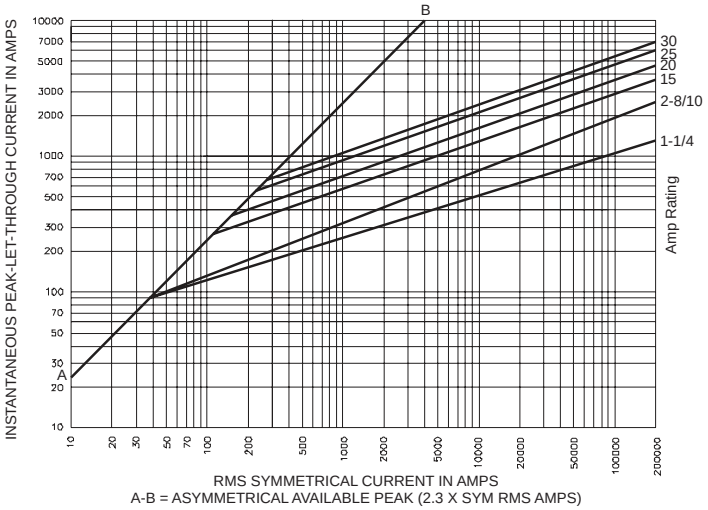

Current-limiting effects:

Prospective S.C.C.	Let-through current (apparent RMS symmetrical vs. fuse rating)					
	1-1/4 A	2-8/10 A	15 A	20 A	25 A	30 A
1000	100	135	240	305	380	435
3000	140	210	350	440	575	580
5000	165	255	420	570	690	710
10,000	210	340	540	700	870	1000
20,000	260	435	680	870	1090	1305
30,000	290	525	800	1030	1300	1520
40,000	315	610	870	1150	1390	1700
50,000	340	650	915	1215	1520	1820
60,000	350	735	1050	1300	1650	1980
80,000	390	785	1130	1500	1780	2180
100,000	420	830	1210	1600	2000	2400
200,000	525	1100	1600	2000	2520	3050

NOTE: To calculate I_p (I_{peak}) multiply I_{RMS} value by 2.3.

The only controlled copy of this data sheet is the electronic read-only version located on the Eaton network drive. All other copies of this document are by definition uncontrolled. This bulletin is intended to clearly present comprehensive product data and provide technical information that will help the end user with design applications. Eaton reserves the right, without notice, to change design or construction of any products and to discontinue or limit distribution of any products. Eaton also reserves the right to change or update, without notice, any technical information contained in this bulletin. Once a product has been selected, it should be tested by the user in all possible applications.

Eaton
1000 Eaton Boulevard
Cleveland, OH 44122
Eaton.com

Bussmann Division
114 Old State Road
Ellisville, MO 63021
United States
Eaton.com/bussmannseries

© 2019 Eaton
All Rights Reserved

Publication No. 1023
October 2019

Eaton, Bussmann and Low-Peak are valuable trademarks of Eaton in the US and other countries. You are not permitted to use the Eaton trademarks without prior written consent of Eaton.

UL is a registered trademark of the Underwriters Laboratories, Inc.
CSA is a registered trademark of the Canadian Standards Group.
NEC is a registered trademark of the National Fire Protection Association, Inc.

For Eaton's Bussmann series product information, call **1-855-287-7626** or visit: **Eaton.com/bussmannseries**

Follow us on social media to get the latest product and support information.

Powering Business Worldwide

1-, 2- and 3-pole — Class CC, midget, 10x38mm

Description:

The revolutionary Bussmann series Compact Circuit Protector (CCP) fused disconnect switch is 2/3 the footprint of a traditional fusible switch and can provide up to a high 200 kA SCCR that can help improve assembly SCCR.

Specifications:

Ratings

- Volts
  - 600 Vac (Class CC)
  - 240 Vac (midget UL®)
  - 400 Vac (midget International Electrotechnical Commission (IEC)
  - 80Vdc (DC Class CC/UL, DC midget/IEC)
- Amps
  - 30A (UL)
  - 32A (IEC)
- SCCR
  - 200 kA (Class CC)
  - 10 kA (midget UL)
  - 120 kA (midget IEC max)
  - 20 kA (DC Class CC/UL)
  - 10 kA (DC midget/IEC)

1-Pole DC CCP

Poles

- 1-, 2- and 3-pole versions

Agency information

- CE
- RoHS compliant
- For Class CC fuse versions
  - UL 98 Listed, File E302370, Guide WHTY
  - cULus to CSA Standard 22.2 No. 4-04, File 302370, Guide WHTY7
- For UL midget and 10X38 IEC fuse versions
  - UL 508 Listed, File E320230, Guide NRNT
  - cULus Certified 22.2 No. 14-05
  - IEC 60947-3 AC23A
  - IEC 60947-3 DC23A

Conductors 75°C Cu or higher

- Single/dual 18-6AWG solid or stranded
- Single 4AWG solid or stranded

Terminals

- Single/dual conductor box lug or fork terminal suitable for line, load or accessory connection

Torque

- 18-10AWG 20 Lb-In
- 8-4AWG 35 Lb-In

Storage and operating temperature

- -20°C to 75°C*

* For fuse performance under or above 25°C, consult fuse performance derating charts in the Bussmann Division publication titled Selecting Protective Devices (SPD), data sheet No. 3002.

Flammability rating

- UL 94V0

Lockout/tagout provisions

- 4mm shank lock or Brady pin-out device part number 90850

Mounting

- 35mm DIN-Rail

Local open fuse indication minimum voltage**

- 90 Vac for AC versions
- 12Vdc for DC versions

** Open fuse indication requires an open fuse to be in the CCP and the switch in the ON position.

Accessories

- Auxiliary contacts
- PLC wired remote fuse indication

Shipping weight

- 2.84 lbs (1.29 kg) per carton

Carton quantity

- 12 poles

Features:

- Extremely compact design at 17.5mm wide per pole
- High Short-Circuit Current Ratings (SCCR) up to 200 kA (UL) and 120 kA (IEC)
- Disconnect rated to provide means for load isolation
- Full voltage rated up to 600 Vac or 80Vdc
- Class CC version is UL 98 Listed and horsepower rated, and suitable for branch circuit disconnect and branch circuit protection
- IEC 10x38 version complies with IEC 60947-3 and suitable for branch circuit disconnect and branch circuit protection
- Suitable for global installations, the units comply with UL, cULus, and IEC standards accepting UL Class CC, midget or IEC aM and gG/gL fuses
- Open fuse indication:
  - Local fuse indication lights are standard
  - Optional wired remote open fuse indication can be utilized to signal a PLC and open a contactor to de-energize all phases, if required
- IP20 finger-safe with 10AWG (6mm^2) or larger wire
- Built-in switch interlock prohibits removing the fuse under load
- Padlockable handle for lockout/tagout procedures - recommend using Brady pin-out device part number 90850

Compact Circuit Protector (CCP)
UL Class CC, CF (CUBEFuse), midget and IEC 10x38mm
fused disconnect switches

Technical Data 1157
Effective March 2017

Catalog numbers:

Amp rating	Fuse class	No. of poles	Volts	SCCR	Max horsepower rating (Vac) 120	240	480	600	Wire size/ (torque*)	Wire type	Catalog no.	Agency information
30	CC	1	600 Vac	200 kA	0.5	—	—	—	Single/Dual 18-6AWG Sol/Str; Single 4AWG Sol/Str; Spade Terminal††	75°C Cu or higher	CCP-1-30CC	UL 98 Listed, cULus 22.2, No. 4-04
30	CC	2	600 Vac	200 kA	—	2	—	—			CCP-2-30CC	UL 98 Listed, cULus 22.2, No. 4-04
30	CC	3	600 Vac	200 kA	—	3	5	7.5			CCP-3-30CC	UL 98 Listed, cULus 22.2, No. 4-04
30	UL Midget	1	240 Vac†	10 kA†	—	—	—	—			CCP-1-30M	UL 508 Listed, cULus 22.2, No. 14-05
32**	10x38 IEC		400 Vac†	120 kA†								IEC 60947-3, AC-23A
30	UL Midget	2	240 Vac†	10 kA†	—	—	—	—			CCP-2-30M	UL 508 Listed, cULus 22.2, No. 14-05
32**	10x38 IEC		400 Vac†	120 kA†								IEC 60947-3, AC-23A
30	UL Midget	3	240 Vac†	10 kA†	—	—	—	—			CCP-3-30M	UL 508 Listed, cULus 22.2, No. 14-05
32**	10x38 IEC		400 Vac†	120 kA†								IEC 60947-3, AC-23A
30	CC	1	80Vdc†	20 kA†	—	—	—	—			CCP-1-DCC	UL 98 Listed, CSA 22.2, No. 4-04
30	UL Midget	1	80Vdc†	10 kA†	—	—	—	—			CCP-1-DCM	UL 508 Listed, cULus 22.2, No. 14-05
32**	10x38 IEC											IEC 60947-3, DC-23A

* 18-10AWG; 20 Lb-In, 8-4AWG; 35 Lb-In.
** 32A Class aM, 25A Class gG.
† SCCR May be lower, refer to installed fuse data sheets.
†† Fork terminal with a 4.3mm gap for a #8-32 stud, 30A max, insulated flange, wire size 12-10AWG.

Available Bussmann series fuses:

Fuse class	Type/description	Volts	Data sheet no.
CC	LP-CC time-delay, current limiting	600 Vac/300Vdc	1023
CC	FNQ-R time-delay	600 Vac/300Vdc	1014
CC	KTK-R fast-acting	600 Vac	1015
M	FNM time-delay	250 Vac	2028
M	FNQ time-delay	500 Vac	1012
M	KTK fast-acting	600 Vac	1011
M	BAF fast-acting	250 Vac	2011
M	KLM fast-acting	600 Vac/dc	2020
gG/gL	C10G	500V (400V@32A)	720115
aM	C10M	500V (400V@20@25A)	720115

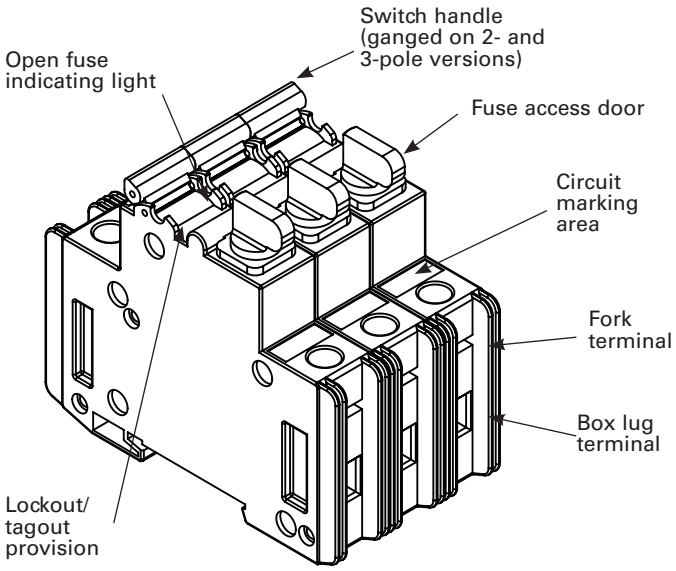

Recommended lockout device:

CCP version	Brady pin-out device P/N
Class CC, midget, IEC 10x38	90850

Dimensions – mm (in)

Class CC, UL midget and I0x38 IEC

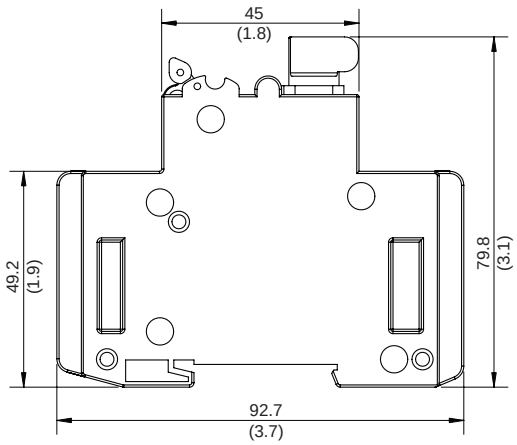

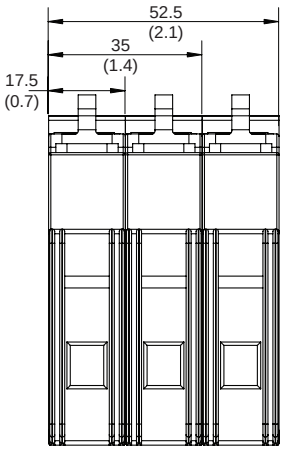

ITEM 736Q

HPS Centurion® R
Line Reactor

HPS Centurion® R Reactor

The new HPS Centurion® R reactor provides a unique blend of improved performance and reliability while reducing the traditional product footprint. HPS Centurion® R reactors deliver protection for your motors and drives. They are available in standard ratings from 0.5 HP (373 Watts) to 1200 HP (895 kilowatts), up to 600 V (690 V with de-rating) and are fully compliant with UL, CSA, CE, IEC, and NEMA standards.

The efficient and cost effective HPS Centurion® R reactors are built to satisfy the power quality needs of demanding AC drive applications.

Why Choose a Reactor?

HPS reactors are designed to address line-side issues associated with variable frequency drives. They attenuate voltage and current transients that can cause nuisance tripping of a drive. Reactors also minimize harmonic current levels within the drive supply circuit. When used on the output side of IGBT-based, PWM-type AC drives, HPS reactors reduce the motor operating temperature and audible noise by moderating line transients seen by the motor. The use of HPS reactors enhances the overall system performance, life expectancy, and efficiency of the motor.

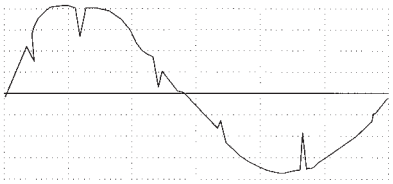

Voltage waveform illustrating line notching caused by the DC rectifier in typical AC drives

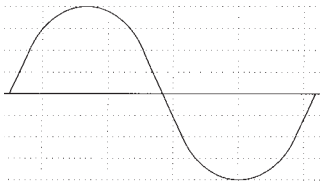

Ideal sine wave from the utility supply

Connection Diagram

(a) single motor

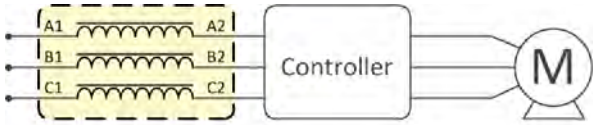

(b) multiple motors

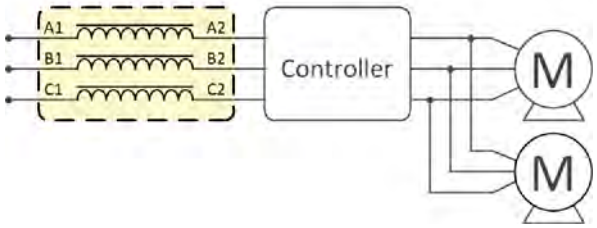

Input Side

(a) single motor

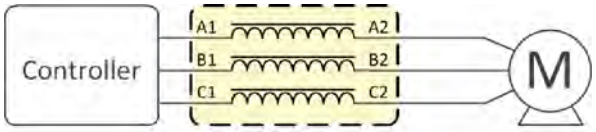

(b) multiple motors

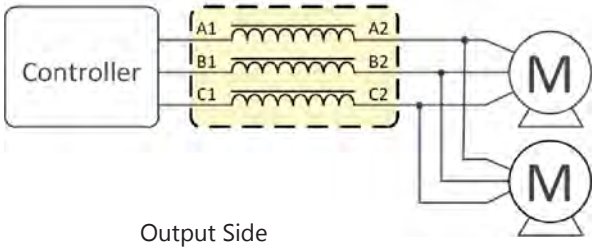

Output Side

Hammond Power Solutions

CONSTRUCTION

Assembly

- The impedance of the reactors is accurately controlled by maintaining the core gaps in the flux path.
- In some HP ranges, bobbins are used to provide exceptional mechanical strength and increase the product reliability.
- Every reactor is vacuum pressure impregnated (VPI) with VT (vinyl-toluene) Polyester Resin to minimize audible noise.

Terminations

- Finger-proof terminal blocks are provided on rated currents of approximately below 65 Amps.
- Terminal pads are supplied on approximately 65 Amps and above.
  - Terminal pads are brazed to ensure electrical integrity.

Enclosures

- Open core & coil or Type 1 standard (3R available; consult HPS for availability of enclosed units)
- Rugged steel enclosures with UL50 ANSI 61 grey paint

Specials

- For special applications or for any features that you may require beyond the standard line listed, please contact our sales office.

BENEFITS

- Mitigate nuisance tripping
- Extend the life of switching components and motors
- Reduce audible motor noise and motor operating temperature
- Mitigate the effect of long lead length
- Minimize harmonic distortion
- Reduce line notching

SPECIFICATIONS

Impedance Rating: 3% and 5%

System Frequency: 50/60 Hertz

System Voltage Ratings: 208 V, 240 V, 480 V, 575 V, 600 V (690 V de-rated)

Altitude (de-rating): Comply with NEMA ST20

Inductance Tolerance: +15/-10%

Inductance Curve:

% Nominal Inductance	% Rated Current
100	100
95	110
80	150
50	200

Dielectric strength to ground: 4000 volts for 1 minute or equivalent

Cooling Method: Natural convection

Temperature Rise:
- 80°C for 130°C Temperature Insulation Class
- 115°C for 180°C or 220°C Temperature Insulation Class

specifications subject to change

APPLICATIONS

Oil & Gas

Irrigation Fields

Wastewater

Food Processing

HVAC

Pharmaceutical

Steel

Pulp & Paper

Automotive

COMPLIANCE & APPROVALS

HPS Centurion® R is certified to the following standards:

- UL 508
- CSA C9
- CSA C22.2 No. 47 standards
- CE Mark (IEC 61558-2-20:2000)
- UL Listed (up to 600V), file No. E61431
- CSA Certified file No. LR3902
- IEC 61558-2-20

HPS Centurion® R
Line Reactor

HPS Centurion® R Features

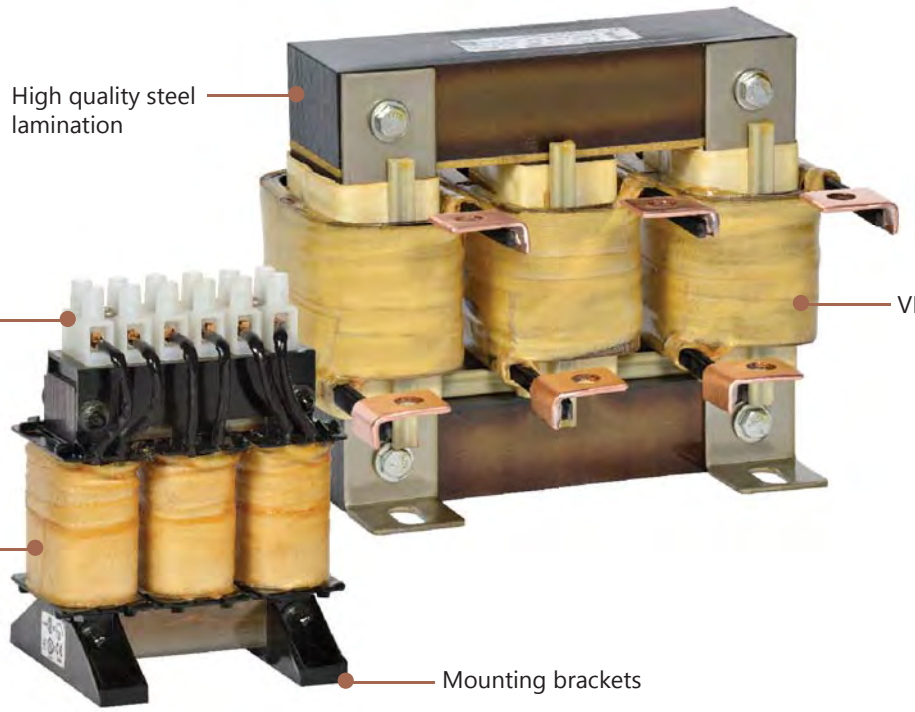

HPS Centurion® R Part Number Guide

C	R	X	1	2	3	4	A	E

Open or Enclosed
C for Core & Coil
E for Enclosed

Relative Impedance

Rated Current
D for Decimal
i.e. 02D4 is 2.4

Product Line

Hammond Power Solutions

SELECTION TABLES

HP Rating	208 Volt - 60Hz					
	3% Impedance			5% Impedance		
	Amps	Core & Coil Part Num.	Enclosed Part Num.	Amps	Core & Coil Part Num.	Enclosed Part Num.
0.5	2.4	CRX02D4BC	CRX02D4BE	2.4	CRX02D4DC	CRX02D4DE
0.75	3.5	CRX03D5AC	CRX03D5AE	3.5	CRX03D5DC	CRX03D5DE
1	4.6	CRX04D6BC	CRX04D6BE	4.6	CRX04D6CC	CRX04D6CE
1.5	6.6	CRX06D6BC	CRX06D6BE	6.6	CRX06D6CC	CRX06D6CE
2	7.5	CRX07D5AC	CRX07D5AE	7.5	CRX07D5DC	CRX07D5DE
3	10.7	CRX10D7BC	CRX10D7BE	10.7	CRX10D7DC	CRX10D7DE
5	16.7	CRX16D7BC	CRX16D7BE	16.7	CRX16D7DC	CRX16D7DE
7.5	24	CRX0024AC	CRX0024AE	24	CRX0024CC	CRX0024CE
10	31	CRX0031BC	CRX0031BE	31	CRX0031CC	CRX0031CE
15	46	CRX0046BC	CRX0046BE	46	CRX0046CC	CRX0046CE
20	59	CRX0059AC	CRX0059AE	59	CRX0059CC	CRX0059CE
25	75	CRX0075AC	CRX0075AE	75	CRX0075CC	CRX0075CE
30	88	CRX0088BC	CRX0088BE	88	CRX0088CC	CRX0088CE
40	114	CRX0114AC	CRX0114AE	114	CRX0114CC	CRX0114CE
50	143	CRX0143AC	CRX0143AE	143	CRX0143DC	CRX0143DE
60	170	CRX0170BC	CRX0170BE	170	CRX0170DC	CRX0170DE
75	211	CRX0211BC	CRX0211BE	211	CRX0211CC	CRX0211CE
100	273	CRX0273BC	CRX0273BE	273	CRX0273CC	CRX0273CE
125	343	CRX0343BC	CRX0343BE	343	CRX0343CC	CRX0343CE
150	396	CRX0396BC	CRX0396BE	396	CRX0396DC	CRX0396DE
200	528	CRX0528BC	CRX0528BE	528	CRX0528CC	CRX0528CE

HP Rating	240 Volt - 60Hz					
	3% Impedance			5% Impedance		
	Amps	Core & Coil Part Num.	Enclosed Part Num.	Amps	Core & Coil Part Num.	Enclosed Part Num.
0.5	2.4	CRX02D4AC	CRX02D4AE	2.4	CRX02D4CC	CRX02D4CE
0.75	3.5	CRX03D5BC	CRX03D5BE	3.5	CRX03D5CC	CRX03D5CE
1	4.6	CRX04D6AC	CRX04D6AE	4.6	CRX04D6DC	CRX04D6DE
1.5	6.6	CRX06D6AC	CRX06D6AE	6.6	CRX06D6DC	CRX06D6DE
2	7.5	CRX07D5BC	CRX07D5BE	7.5	CRX07D5CC	CRX07D5CE
3	10.7	CRX10D7AC	CRX10D7AE	10.7	CRX10D7CC	CRX10D7CE
5	16.7	CRX16D7AC	CRX16D7AE	16.7	CRX16D7CC	CRX16D7CE
7.5	24	CRX0024BC	CRX0024BE	24	CRX0024DC	CRX0024DE
10	31	CRX0031AC	CRX0031AE	31	CRX0031DC	CRX0031DE
15	46	CRX0046AC	CRX0046AE	46	CRX0046DC	CRX0046DE
20	59	CRX0059BC	CRX0059BE	59	CRX0059DC	CRX0059DE
25	75	CRX0075BC	CRX0075BE	75	CRX0075DC	CRX0075DE
30	88	CRX0088AC	CRX0088AE	88	CRX0088DC	CRX0088DE
40	114	CRX0114BC	CRX0114BE	114	CRX0114DC	CRX0114DE
50	143	CRX0143BC	CRX0143BE	143	CRX0143CC	CRX0143CE
60	170	CRX0170AC	CRX0170AE	170	CRX0170CC	CRX0170CE
75	211	CRX0211AC	CRX0211AE	211	CRX0211DC	CRX0211DE
100	273	CRX0273AC	CRX0273AE	273	CRX0273DC	CRX0273DE
125	343	CRX0343AC	CRX0343AE	343	CRX0343DC	CRX0343DE
150	396	CRX0396AC	CRX0396AE	396	CRX0396CC	CRX0396CE
200	528	CRX0528AC	CRX0528AE	528	CRX0528DC	CRX0528DE

HP Rating	480 Volt - 60Hz					
	3% Impedance			5% Impedance		
	Amps	Core & Coil Part Num.	Enclosed Part Num.	Amps	Core & Coil Part Num.	Enclosed Part Num.
0.5	1.1	CRX01D1AC	CRX01D1AE	1.1	CRX01D1BC	CRX01D1BE
0.75	1.6	CRX01D6AC	CRX01D6AE	1.6	CRX01D6BC	CRX01D6BE
1	2.1	CRX02D1AC	CRX02D1AE	2.1	CRX02D1BC	CRX02D1BE
1.5	3	CRX0003AC	CRX0003AE	3	CRX0003BC	CRX0003BE
2	3.4	CRX03D4AC	CRX03D4AE	3.4	CRX03D4BC	CRX03D4BE
3	4.8	CRX04D8AC	CRX04D8AE	4.8	CRX04D8BC	CRX04D8BE
5	7.6	CRX07D6AC	CRX07D6AE	7.6	CRX07D6BC	CRX07D6BE
7.5	11	CRX0011BC	CRX0011BE	11	CRX0011CC	CRX0011CE
10	14	CRX0014AC	CRX0014AE	14	CRX0014BC	CRX0014BE
15	21	CRX0021AC	CRX0021AE	21	CRX0021BC	CRX0021BE
20	27	CRX0027BC	CRX0027BE	27	CRX0027CC	CRX0027CE
25	34	CRX0034AC	CRX0034AE	34	CRX0034BC	CRX0034BE
30	40	CRX0040AC	CRX0040AE	40	CRX0040BC	CRX0040BE
40	52	CRX0052BC	CRX0052BE	52	CRX0052DC	CRX0052DE
50	65	CRX0065AC	CRX0065AE	65	CRX0065BC	CRX0065BE
60	77	CRX0077AC	CRX0077AE	77	CRX0077DC	CRX0077DE
75	96	CRX0096AC	CRX0096AE	96	CRX0096BC	CRX0096BE
100	124	CRX0124AC	CRX0124AE	124	CRX0124BC	CRX0124BE
125	156	CRX0156AC	CRX0156AE	156	CRX0156BC	CRX0156BE
150	180	CRX0180AC	CRX0180AE	180	CRX0180BC	CRX0180BE
200	240	CRX0240AC	CRX0240AE	240	CRX0240BC	CRX0240BE
250	302	CRX0302AC	CRX0302AE	302	CRX0302BC	CRX0302BE
300	361	CRX0361AC	CRX0361AE	361	CRX0361BC	CRX0361BE
350	414	CRX0414AC	CRX0414AE	414	CRX0414BC	CRX0414BE
400	477	CRX0477AC	CRX0477AE	477	CRX0477BC	CRX0477BE
450	515	CRX0515AC	CRX0515AE	515	CRX0515BC	CRX0515BE
500	590	CRX0590AC	CRX0590AE	590	CRX0590BC	CRX0590BE
600	720	CRX0720AC	CRX0720AE			
700	840	CRX0840AC	CRX0840AE			
800	960	CRX0960AC	CRX0960AE			
900	1080	CRX1080AC	CRX1080AE			
1000	1200	CRX1200AC	CRX1200AE			

HP Rating	600 Volt - 60Hz					
	3% Impedance*			5% Impedance*		
	Amps	Core & Coil Part Num.	Enclosed Part Num.	Amps	Core & Coil Part Num.	Enclosed Part Num.
0.5	1	CRX0001AC	CRX0001AE	1	CRX0001BC	CRX0001BE
0.75	1.4	CRX01D4AC	CRX01D4AE	1.4	CRX01D4BC	CRX01D4BE
1	1.8	CRX01D8AC	CRX01D8AE	1.8	CRX01D8BC	CRX01D8BE
1.5	2.6	CRX02D6AC	CRX02D6AE	2.6	CRX02D6BC	CRX02D6BE
2	2.7	CRX02D7AC	CRX02D7AE	2.7	CRX02D7BC	CRX02D7BE
3	3.9	CRX03D9AC	CRX03D9AE	3.9	CRX03D9BC	CRX03D9BE
5	6.1	CRX06D1AC	CRX06D1AE	6.1	CRX06D1BC	CRX06D1BE
7.5	9	CRX0009AC	CRX0009AE	9	CRX0009BC	CRX0009BE
10	11	CRX0011AC	CRX0011AE	11	CRX0011DC	CRX0011DE
15	17	CRX0017AC	CRX0017AE	17	CRX0017BC	CRX0017BE
20	22	CRX0022AC	CRX0022AE	22	CRX0022BC	CRX0022BE
25	27	CRX0027AC	CRX0027AE	27	CRX0027DC	CRX0027DE
30	32	CRX0032AC	CRX0032AE	32	CRX0032BC	CRX0032BE
40	41	CRX0041AC	CRX0041AE	41	CRX0041BC	CRX0041BE
50	52	CRX0052AC	CRX0052AE	52	CRX0052CC	CRX0052CE
60	62	CRX0062AC	CRX0062AE	62	CRX0062BC	CRX0062BE
75	77	CRX0077BC	CRX0077BE	77	CRX0077CC	CRX0077CE
100	99	CRX0099AC	CRX0099AE	99	CRX0099BC	CRX0099BE
125	125	CRX0125AC	CRX0125AE	125	CRX0125BC	CRX0125BE
150	144	CRX0144AC	CRX0144AE	144	CRX0144BC	CRX0144BE
200	192	CRX0192AC	CRX0192AE	192	CRX0192BC	CRX0192BE
250	242	CRX0242AC	CRX0242AE	242	CRX0242BC	CRX0242BE
300	289	CRX0289AC	CRX0289AE	289	CRX0289BC	CRX0289BE
350	336	CRX0336AC	CRX0336AE	336	CRX0336BC	CRX0336BE
400	382	CRX0382AC	CRX0382AE	382	CRX0382BC	CRX0382BE
450	412	CRX0412AC	CRX0412AE	412	CRX0412BC	CRX0412BE
500	472	CRX0472AC	CRX0472AE	472	CRX0472BC	CRX0472BE

*De-rated for 690V
All dimensions in inches
Refer to page 13 for drawings

HPS Centurion® R
Line Reactor

Open Core & Coil Specification Charts Continued

RMS Amp	Core & Coil	Inductance (mH)	Watts Loss	Width	Depth	Height	Mtg. Width	Mtg. Depth	Mtg. Slot w x d	Diagram Figure	Termination Style Ref.	Frame Size	Enclosure Part Number	Weight (lb)
52	CRX0052CC	0.91	130	7.12	5.19	6.38	4.80	3.77	0.38 x 0.50	2	3	2B	CREN2	25
	CRX0052DC	0.74	170	7.12	5.19	6.38	4.80	3.77	0.38 x 0.50	2	3	2B	CREN2	25
59	CRX0059AC	0.17	55	6.50	5.00	6.13	4.38	4.00	0.28 x 0.38	1	3	1D	CREN1	11.5
	CRX0059BC	0.22	85	7.25	5.88	5.63	4.80	3.27	0.38 x 0.50	3	4	3A	CREN2	18
	CRX0059CC	0.30	75	7.12	4.69	6.38	4.80	3.27	0.38 x 0.50	2	3	2A	CREN2	16
	CRX0059DC	0.36	110	7.25	6.00	5.63	4.80	3.77	0.38 x 0.50	3	4	3C	CREN2	25
62	CRX0062AC	0.45	130	7.12	4.69	6.38	4.80	3.27	0.38 x 0.50	2	3	2A	CREN2	19
	CRX0062BC	0.74	170	7.12	5.19	6.38	4.80	3.77	0.38 x 0.50	2	3	2B	CREN2	25
65	CRX0065AC	0.34	110	7.25	6.00	5.63	4.80	3.77	0.38 x 0.50	3	4	3C	CREN2	25
	CRX0065BC	0.57	120	7.25	6.00	5.63	4.80	3.77	0.38 x 0.50	3	4	3C	CREN2	25
75	CRX0075AC	0.12	70	7.25	5.88	5.63	4.80	3.27	0.38 x 0.50	3	4	3A	CREN2	17
	CRX0075BC	0.19	95	7.25	5.88	5.63	4.80	3.27	0.38 x 0.50	3	4	3A	CREN2	18
	CRX0075CC	0.22	85	7.25	5.88	5.63	4.80	3.27	0.38 x 0.50	3	4	3A	CREN2	18
	CRX0075DC	0.29	105	7.25	6.00	5.63	4.80	3.77	0.38 x 0.50	3	4	3C	CREN2	21
77	CRX0077AC	0.29	105	7.25	6.00	5.63	4.80	3.77	0.38 x 0.50	3	4	3C	CREN2	21
	CRX0077BC	0.36	110	7.25	6.00	5.63	4.80	3.77	0.38 x 0.50	3	4	3C	CREN2	25
	CRX0077CC	0.60	216	9.25	6.25	7.00	6.00	3.70	0.44 x 1.0	3	4	3E	CREN2	30
	CRX0077DC	0.49	160	7.25	6.00	5.63	4.80	3.77	0.38 x 0.50	3	4	3C	CREN2	24
88	CRX0088AC	0.12	70	7.25	5.88	5.63	4.80	3.27	0.38 x 0.50	3	4	3A	CREN2	17
	CRX0088BC	0.12	70	7.25	5.88	5.63	4.80	3.27	0.38 x 0.50	3	4	3A	CREN2	17
	CRX0088CC	0.19	95	7.25	5.88	5.63	4.80	3.27	0.38 x 0.50	3	4	3A	CREN2	18
	CRX0088DC	0.24	120	7.25	6.00	5.63	4.80	3.77	0.38 x 0.50	3	4	3C	CREN2	24
96	CRX0096AC	0.24	120	7.25	6.00	5.63	4.80	3.77	0.38 x 0.50	3	4	3C	CREN2	24
	CRX0096BC	0.39	170	9.25	8.25	7.00	6.00	5.70	0.44 x 1.0	3	4	3N	CREN2	49
99	CRX0099AC	0.28	125	7.25	6.00	5.63	4.80	3.77	0.38 x 0.50	3	4	3C	CREN2	26
	CRX0099BC	0.48	210	9.25	8.00	7.00	6.00	5.45	0.44 x 1.0	3	4	3L	CREN2	48
114	CRX0114AC	0.09	70	7.25	6.00	5.63	4.80	3.27	0.38 x 0.50	3	5	3B	CREN2	18
	CRX0114BC	0.11	140	9.25	6.75	7.00	6.00	3.83	0.44 x 1.0	3	5	3F	CREN2	28
	CRX0114CC	0.14	110	9.25	7.25	7.00	6.00	4.33	0.44 x 1.0	3	5	3J	CREN2	33
	CRX0114DC	0.19	190	10.80	8.25	10.00	7.20	5.21	0.44 x 1.0	4	5	4A	CRECH2	52
124	CRX0124AC	0.19	190	10.80	8.25	10.00	7.20	5.21	0.44 x 1.0	4	5	4A	CRECH2	52
	CRX0124BC	0.30	185	9.25	8.63	7.00	6.00	5.20	0.44 x 1.0	3	5	3Q	CREN2	48
125	CRX0125AC	0.23	160	9.25	7.63	7.00	6.00	4.70	0.44 x 1.0	3	5	3K	CREN2	41
	CRX0125BC	0.38	250	10.80	9.13	10.00	7.20	6.08	0.44 x 1.0	4	5	4C	CRECH2	67
143	CRX0143AC	0.07	88	7.25	6.00	5.63	4.80	3.27	0.38 x 0.50	3	5	3B	CREN2	20
	CRX0143BC	0.10	130	9.25	7.00	7.00	6.00	3.95	0.44 x 1.0	3	5	3H	CREN2	34
	CRX0143CC	0.11	140	9.25	6.75	7.00	6.00	3.83	0.44 x 1.0	3	5	3F	CREN2	28
	CRX0143DC	0.11	140	9.25	6.75	7.00	6.00	3.83	0.44 x 1.0	3	5	3F	CREN2	28
144	CRX0144AC	0.19	190	10.80	8.25	10.00	7.20	5.21	0.44 x 1.0	4	5	4A	CRECH2	52
	CRX0144BC	0.35	240	10.80	9.50	10.00	7.20	6.33	0.44 x 1.0	4	5	4D	CRECH4	74
156	CRX0156AC	0.15	210	9.25	7.00	7.00	6.00	4.08	0.44 x 1.0	3	5	3G	CREN2	32
	CRX0156BC	0.24	260	9.25	8.63	7.00	6.00	5.70	0.44 x 1.0	3	5	3R	CRECH2	32
170	CRX0170AC	0.06	100	7.25	6.25	5.63	4.80	3.77	0.38 x 0.50	3	5	3D	CREN2	23
	CRX0170BC	0.06	100	7.25	6.25	5.63	4.80	3.77	0.38 x 0.50	3	5	3D	CREN2	23
	CRX0170CC	0.10	130	9.25	7.00	7.00	6.00	3.95	0.44 x 1.0	3	5	3H	CREN2	34
	CRX0170DC	0.10	130	9.25	7.00	7.00	6.00	3.95	0.44 x 1.0	3	5	3H	CREN2	34
180	CRX0180AC	0.13	180	9.25	8.88	7.00	6.00	5.95	0.44 x 1.0	3	5	3S	CRECH2	54
	CRX0180BC	0.21	250	10.80	8.38	10.00	7.20	5.33	0.44 x 1.0	4	5	4B	CRECH2	63
192	CRX0192AC	0.15	200	9.25	8.25	7.00	6.00	5.45	0.44 x 1.0	3	5	3P	CRECH2	53
	CRX0192BC	0.25	325	10.80	10.50	10.00	7.20	7.33	0.44 x 1.0	4	5	4E	CRECH2	90
200	CRX0200CC	0.11	195	9.25	7.63	7.00	6.00	4.70	0.44 x 1.0	3	5	3K	CRECH2	44

All dimensions in inches
Refer to page 13 for drawings

HPS Centurion® R

Line Reactor

Diagrams

Figure #1

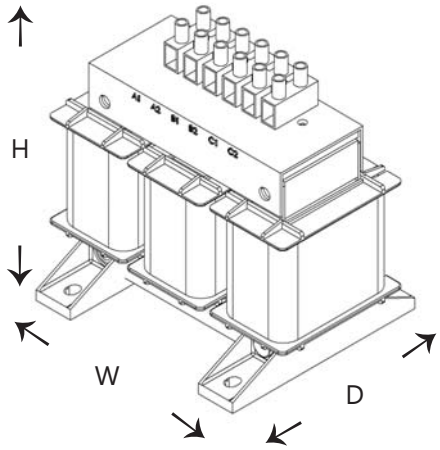

Mounting hardware
(not included)
4 pcs - 1/4 in. bolts
4 pcs - 1/4 in. nuts
8 pcs - 1/4 in. flat washers
4 pcs - 1/4 in. lock washers
Max. tightening torque: 5.5 ft-lb

Figure #2

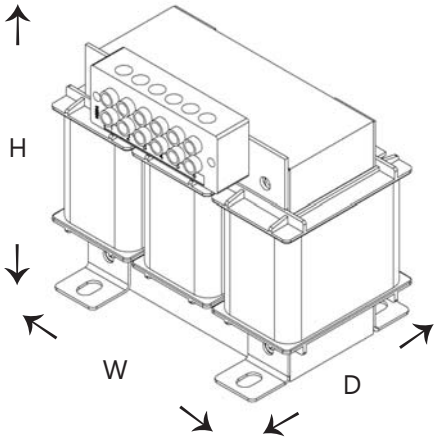

Mounting hardware
(not included)
4 pcs - 5/16 in. bolts
4 pcs - 5/16 in. nuts
8 pcs - 5/16 in. flat washers
4 pcs - 5/16 in. lock washers
Max. tightening torque: 18 ft-lb

Figure #3

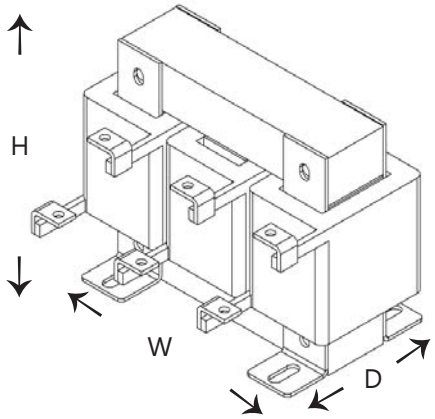

Mounting hardware (not included)	**.38x.5 slot**	**.44x1.0 slot**
4 pcs bolts	5/16 in.	3/8 in.
4 pcs nuts	5/16 in.	3/8 in.
8 pcs flat washers	5/16 in.	3/8 in.
4 pcs lock washers	5/16 in.	3/8 in.
Max. tightening torque	18 ft-lb	28 ft-lb

Figure #4

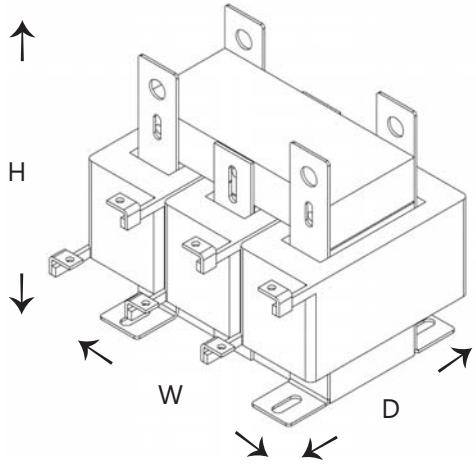

Mounting hardware
(not included)
4 pcs - 3/8 in. bolts
4 pcs - 3/8 in. nuts
8 pcs - 3/8 in. flat washers
4 pcs - 3/8 in. lock washers
Max. tightening torque: 28 ft-lb

Figure #5

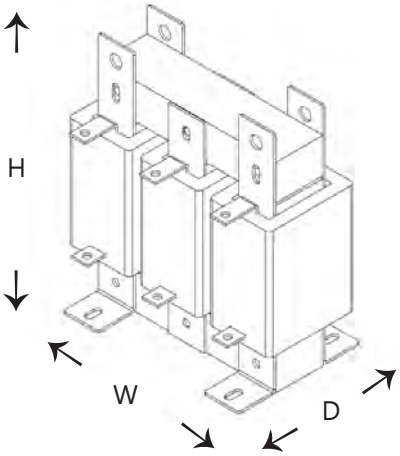

Mounting hardware
(not included)
4 pcs - 3/8 in. bolts
4 pcs - 3/8 in. nuts
8 pcs - 3/8 in. flat washers
4 pcs - 3/8 in. lock washers
Max. tightening torque: 28 ft-lb

ITEM 740B

Allen-Bradley® PowerFlex® 525 AC Drive

The Next Generation of Powerful Performance. Flexible Control.

Allen-Bradley PowerFlex 525 AC drives are ideal for networked applications that require a range of motor control options, embedded EtherNet/IP™, energy savings and standard safety features.

- Power ratings of 0.4...22 kW / 0.5...30 Hp in global voltage classes from 100-600V to meet a wide range of applications
- The modular design eases installation and configuration
- A standard USB connection helps you upload and download configuration files quickly
- An embedded port for EtherNet/IP supports seamless integration into the Logix environment and EtherNet/IP networks
- An optional dual port EtherNet/IP card supports ring topologies and device level ring (DLR) functionality
- Help protect personnel with standard embedded Safe Torque-Off
- An integral LCD human interface module (HIM) supports multiple languages and features scrolling text to explain parameters and codes, easing configuration
- AppView™ parameter groups help speed configuration for applications like conveyors, mixers, pumps and fans
- CustomView™ configuration helps speed machine commissioning with user-defined groups of parameters
- Economizer control mode and permanent magnet motor control* can help reduce energy costs
- Drives operate in low and high ambient temperatures from -20°C (-4°F) up to 70°C (158°F) with current derating and a control module fan kit
- A compact footprint helps save space inside a panel
- A wide range of motor control options, including volts per hertz, sensorless vector control, closed loop velocity vector control and control for permanent magnet motors support many applications

* Permanent magnet motor control is scheduled for a future firmware release

Innovative Modular Design

PowerFlex 525 AC drives are made up of two modules that can be detached for simultaneous and independent wiring installation and software configuration. This innovative design allows you to begin mounting the power modules while configuration of the control modules is performed elsewhere, helping speed up installation. The same control module accommodates the entire power range of PowerFlex 525 AC drives, offering installation flexibility and helping reduce spare part inventory.

Ease of Configuration

There are several ways to quickly and easily configure PowerFlex 525 AC drives. From the integral HIM that features QuickView™ scrolling text, to Connected Components Workbench™ software or the Studio 5000 Logix Designer™ application, these tools are designed to help you reduce development time so you can deliver machines faster and more efficiently.

The Studio 5000 Logix Designer application provides complete support for PowerFlex 525 AC drives. One software tool to configure your Logix system can help reduce programming time and allow you to configure, control and monitor your system from one platform.

Automatic Device Configuration (ADC) is another productivity enhancing feature available with the Studio 5000 Logix Designer application and PowerFlex 525 AC drives. This feature allows a Logix controller to automatically detect a replaced PowerFlex 525 drive and download firmware and all configuration parameters, minimizing the need for manual reconfiguration.

ITEM 740B

Specifications

Power Ratings	100 - 120V: 0.4...1.1 kW / 0.5...1.5 Hp 200 - 240V: 0.4...15 kW / 0.5...20 Hp	380 - 480V: 0.4...22 kW / 0.5...30 Hp 525 - 600V: 0.4...22 kW / 0.5...30 Hp	
Motor Control	Volts per hertz Sensorless vector control	Closed loop velocity vector control Permanent magnet motor control*	Sensorless vector control with Economizer
Application	Open loop speed regulation	Closed loop speed regulation	
Overload Capability	Normal duty application: 110% for 60 seconds, 150% for 3 sec	Heavy duty application: 150% for 60 seconds, 180% for 3 sec (200% programmable)	
Input Specification	1 phase Voltage: 100 … 120V/200 … 240V 3 phase Voltage: 200 … 240V/380 ... 480V/525 … 600V Frequency: 50 to 60 Hz 1/2 DC bus operation (selectable)	Voltage: Adjustable 0V to rated motor voltage; -15% / +10% voltage tolerance Logic control ride through: >0.5 seconds, 2 seconds typical Maximum short circuit rating: 100,000 amps symmetrical	
Output Voltage Range	Adjustable 0V to rated motor voltage	Intermittent current: 150% for 60 seconds	
Frequency Range	Max output frequency 500 Hz	Input frequency variation 47 to 63 Hz	
Ambient Operating Temperatures* *	-20°C to 50°C (-4°F to 122°F) -20°C to 60°C (-4°F to 140°F) with current derating -20°C to 70°C (-4°F to 158°F) with current derating (with optional control module fan kit)		
Altitude	1000 m (3280 ft) with derating guideline for up to max 4000 m (13,123 ft), with the exception of 600V at max 2000 m (6,561ft)		
Enclosures	IP20 NEMA/Open	IP30 NEMA/UL Type 1 (with conduit kit)	
Mounting	50mm (1.96 in) air-flow gap at the top and bottom*** DIN rail (frames A,B and C)	Zero Stacking (side-by-side mounting) Horizontal Mounting (with control module fan kit)	
Configuration	Integral HIM, LCD, 5 digits, 16 segments, multi-language	Connected Components Workbench software	Studio 5000 Logix Designer™ application
Integral Human Interface Module (HIM) Languages	English, French, Spanish, Italian, German, Portuguese, Polish, Turkish, Czech		
Control I/O	7 digital inputs (24V DC, 6 programmable) 2 analog inputs (1 bipolar voltage, 1 current)	2 digital outputs 2 relays (1 form A relay & 1 form B relay; 24V DC, 120V AC, 240V AC)	1 analog output (1 unipolar voltage or current)
Dynamic Braking	7th IGBT braking, DC braking		
Carrier Frequency	2 to 16 kHz. 4 kHz default		
EMC Filtering	Embedded 1 ph 240V and 3 ph 480V. Available as an external option for all voltages		
Safety	Embedded ISO 13849-1 SIL2/PLd Cat 3 Safe Torque-Off		
Communications	Embedded EtherNet/IP port Integral RS485 with Modbus RTU/DSI	Dual port EtherNet/IP option card PROFIBUS® DP option card	DeviceNet option card
Feedback Types	Line driver type encoder quadrature (dual channel) or single channel - single ended or differential (A, B channel); Duty cycle of 50%, +10% Pulse-train input (1 to 100kHz) - configurable input voltage: 5VDC (±10%); 10-12VDC (±10%), or 24V DC (±15%) Allowance pulse frequency - DC to 250 kHz Frequency controlled PWM allowable pulse frequency		
Protection	Fault history log, password-lock security		
Standards	UL TUV C-Tick Semi F47 ATEX CE Marine (Lloyds) RoHS ACS 156 CE cUL GOST-R KCC		
Control Features	Flying start V/F ratio Bus regulator Process PID PTC input compatible	Fiber application specific features Common DC bus 1/2 DC bus operation Regulation with encoder feedback or analog input Mutli-drive connectivity (requires communication option card)	8 datalinks (4 in and 4 out, requires communication option card) Position control StepLogic Function (Relay & Timers) 16 preset speeds
Accessories	NEMA/UL Type 1 kits Line reactors 70°C (158°F) control module fan kit (may require external power)	EMC line filters EMC plates	Incremental encoder Dynamic brake resistors
Dimensions mm (in)	Frame A: 152 (5.98) H x 72 (2.83) W x 172 (6.77) D Frame D: 260 (10.23) H x 130 (5.11) W x 212 (8.34) D	Frame B: 180 (7.08) H x 87 (3.42) W x 172 (6.77) D Frame E: 300 (11.81) H 185 (7.28) W x 279 (10.98) D	Frame C: 220 (8.66) H x 109 (4.29) W x 184 (7.24) D

* Permanent magnet motor control is scheduled for a future firmware release
** These temperatures are for typical vertical drive mounting. For other mounting options and temperatures, please refer to the user manual (520-UM001). Environmental considerations may apply.
*** Frame E at 60°C to 70°C requires 95mm (3.74 in) airflow gap at the top of the drive and a control module fan kit

Follow ROKAutomation on Facebook & Twitter. Connect with us on Linkedin.

Allen-Bradley, AppView, Connected Components Workbench, CustomView, LISTEN. THINK. SOLVE., PowerFlex, QuickView, Rockwell Software and Studio 5000 are trademarks of Rockwell Automation, Inc. Trademarks not belonging to Rockwell Automation are property of their respective companies.

www.rockwellautomation.com www.ab.com/powerflex525

Power, Control and Information Solutions Headquarters

Americas: Rockwell Automation, 1201 South Second Street, Milwaukee, WI 53204-2496 USA, Tel: (1) 414.382.2000, Fax: (1) 414.382.4444
Europe/Middle East/Africa: Rockwell Automation NV, Pegasus Park, De Kleetlaan 12a, 1831 Diegem, Belgium, Tel: (32) 2 663 0600, Fax: (32) 2 663 0640
Asia Pacific: Rockwell Automation, Level 14, Core F, Cyberport 3, 100 Cyberport Road, Hong Kong, Tel: (852) 2887 4788, Fax: (852) 2508 1846

Publication 525-PP001A-EN-P - August 2013

Copyright © 2013 Rockwell Automation, Inc. All Rights Reserved. Printed in USA.

PowerFlex 525 AC Drive

PowerFlex 525 AC drives feature an innovative, modular design offering fast and easy installation and configuration. These cost-effective compact drives come with embedded EtherNet/IP™ communications, safety, USB configuration and a high ambient operating temperature. PowerFlex 525 AC drives also provide a variety of motor control including volts per hertz, sensorless vector control and closed loop velocity vector control, making these drives ideal for a vast array of applications.

PowerFlex 525 at a glance

Ratings	
100…120V:	0.4…1.1 kW / 0.5…1.5 Hp / 2.5…6 A
200…240V:	0.4…15 kW / 0.5…20 Hp / 2.5…62.1 A
380…480V:	0.4…22 kW / 0.5…30 Hp / 2.5…62.1 A
525…600V:	0.4…22 kW / 0.5…30 Hp / 0.9…32 A
Motor Control	• V/Hz Control • Sensorless Vector Control • Closed Loop Velocity Vector Control • Permanent Magnet Motor Control ♣
Enclosures	• IP20, NEMA/UL Type Open • IP30, NEMA/UL Type 1 (with optional kit)
Safety	Safe Torque-Off PLd/SIL2 Cat 3 (meets ISO 13849-1)
Additional Features	• Modular design eases installation • Operating temperatures up to 50 °C. Up to 70 °C with current derating and optional control module fan kit. • Embedded EtherNet/IP port with option for dual port EtherNet/IP card which supports DLR functionality • LCD HIM with multi-language support • MainsFree™ Programming via USB • Configure using Connected Components Workbench Software • Add-on Profiles for Studio 5000™ Logix Designer Software • Automatic Device Configuration • Economizer motor control for energy savings • Application specific parameter groups • Simple positioning control with optional encoder card • Conformal coating to IEC 60721 3C2 standards
Certifications	• ACS 156 • ATEX • C-Tick • c-UL, UL • CE • EPRI/SEMI F47 • GOST-R • KCC • RINA • RoHS • TÜV FS ISO/EN13849-1 (EN954-1) with Safe Torque-Off option
Options	See pages 52…56

♣ Permanent magnet motor control is scheduled for a future firmware release.

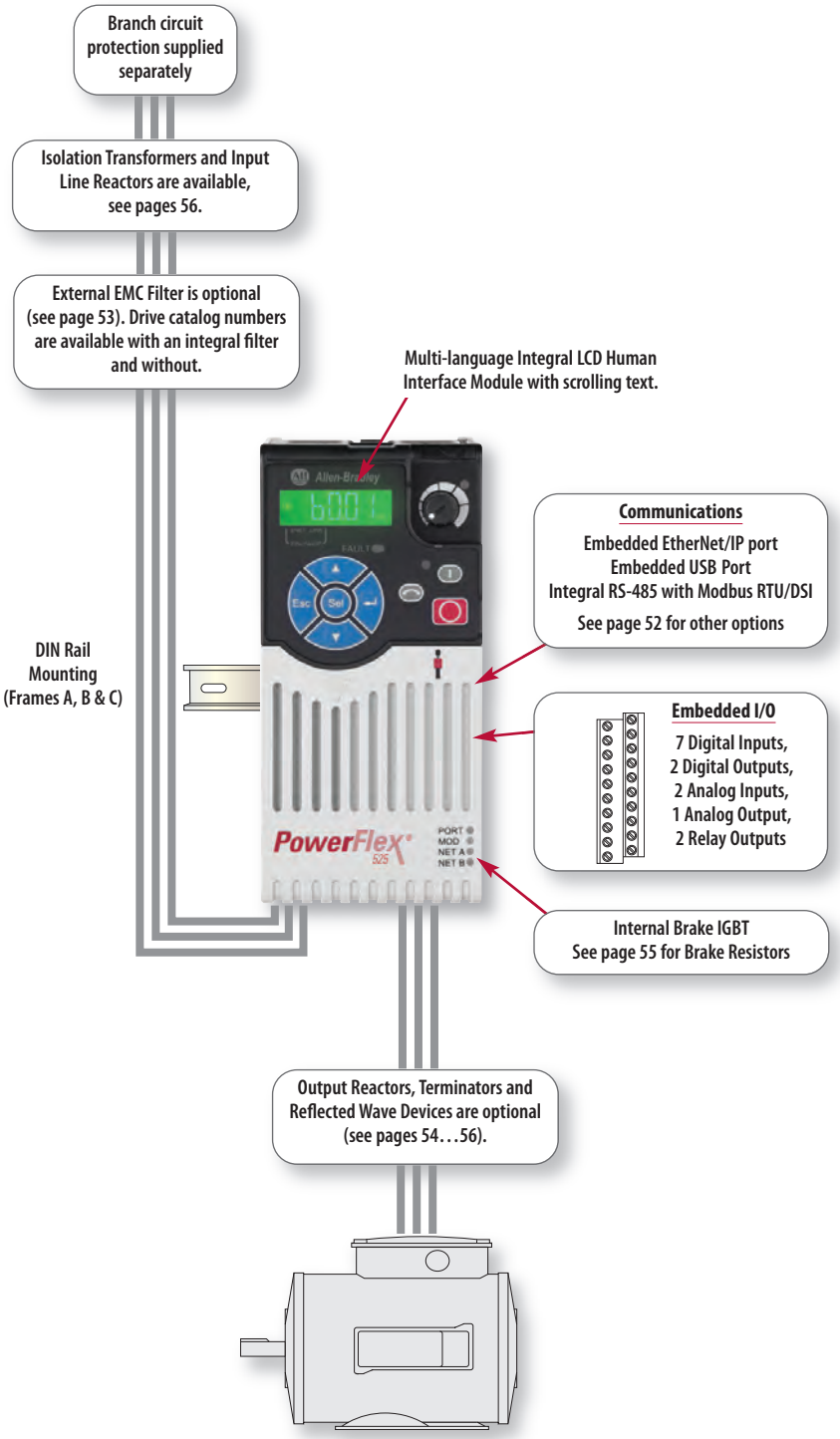

Additional Information

PowerFlex 525 Technical Data, publication 520-TD001
PowerFlex 525 User Manual, publication 520-UM001

Catalog Number Explanation

25B –	D	6P0	N	1	1	4
	Voltage Rating	Rating	Enclosure		Internal EMC Filter 0 = No 1 = Yes	

Product Selection

100…120V AC, Single-Phase, 50/60 Hz

Drive Ratings						No Filter	with Integral EMC Filter
Normal Duty		Heavy Duty		Output Current			
kW	Hp	kW	Hp	A	Frame Size	Cat. No.	Cat. No.
0.4	0.5	0.4	0.5	2.5	A	**25B-V2P5N104**	—
0.75	1	0.75	1	4.8	B	**25B-V4P8N104**	—
1.1	1.5	1.1	1.5	6	B	**25B-V6P0N104**	—

200…240V AC, Single-Phase, 50/60 Hz

Drive Ratings						No Filter	with Integral EMC Filter ‡
Normal Duty		Heavy Duty		Output Current			
kW	Hp	kW	Hp	A	Frame Size	Cat. No.	Cat. No.
0.4	0.5	0.4	0.5	2.5	A	**25B-A2P5N104**	**25B-A2P5N114**
0.75	1	0.75	1	4.8	A	**25B-A4P8N104**	**25B-A4P8N114**
1.5	2	1.5	2	8	B	**25B-A8P0N104**	**25B-A8P0N114**
2.2	3	2.2	3	11	B	**25B-A011N104**	**25B-A011N114**

‡ This filter is suitable for use with a cable length of up to 10 meters for C2 spec.

200…240V AC, Three-Phase, 50/60 Hz

Drive Ratings						No Filter	with Integral EMC Filter
Normal Duty		Heavy Duty		Output Current			
kW	Hp	kW	Hp	A	Frame Size	Cat. No.	Cat. No.
0.4	0.5	0.4	0.5	2.5	A	**25B-B2P5N104**	—
0.75	1	0.75	1	5	A	**25B-B5P0N104**	—
1.5	2	1.5	2	8	A	**25B-B8P0N104**	—
2.2	3	2.2	3	11	A	**25B-B011N104**	—
4	5	4	5	17.5	B	**25B-B017N104**	—
5.5	7.5	5.5	7.5	24	C	**25B-B024N104**	—
7.5	10	7.5	10	32.2	D	**25B-B032N104**	—
11	15	11	15	48.3	E	**25B-B048N104**	—
15	20	11	15	62.1	E	**25B-B062N104**	—

380…480V AC, Three-Phase, 50/60 Hz

Drive Ratings						No Filter	with Integral EMC Filter ‡
Normal Duty		Heavy Duty		Output Current			
kW	Hp	kW	Hp	A	Frame Size	Cat. No.	Cat. No.
0.4	0.5	0.4	0.5	1.4	A	**25B-D1P4N104**	**25B-D1P4N114**
0.75	1	0.75	1	2.3	A	**25B-D2P3N104**	**25B-D2P3N114**
1.5	2	1.5	2	4	A	**25B-D4P0N104**	**25B-D4P0N114**
2.2	3	2.2	3	6	A	**25B-D6P0N104**	**25B-D6P0N114**
4	5	4	5	10.5	B	**25B-D010N104**	**25B-D010N114**
5.5	7.5	5.5	7.5	13	C	**25B-D013N104**	**25B-D013N114**
7.5	10	7.5	10	17	C	**25B-D017N104**	**25B-D017N114**
11	15	11	15	24	D	**25B-D024N104**	**25B-D024N114**
15	20	11	15	30	D	**25B-D030N104**	**25B-D030N114**
18.5	25	15	20	37	E	**25B-D037N114 §**	**25B-D037N114**
22	30	18.5	25	43	E	**25B-D043N114 §**	**25B-D043N114**

‡ This filter is suitable for use with a cable length of up to 10 meters for C2 spec.
§ With EMC filter.

525…600V AC, Three-Phase, 50/60 Hz

Drive Ratings						No Filter	with Integral EMC Filter
Normal Duty		Heavy Duty		Output Current			
kW	Hp	kW	Hp	A	Frame Size	Cat. No.	Cat. No.
0.4	0.5	0.4	0.5	0.9	A	**25B-E0P9N104**	—
0.75	1	0.75	1	1.7	A	**25B-E1P7N104**	—
1.5	2	1.5	2	3	A	**25B-E3P0N104**	—
2.2	3	2.2	3	4.2	A	**25B-E4P2N104**	—
4	5	4	5	6.6	B	**25B-E6P6N104**	—
5.5	7.5	5.5	7.5	9.9	C	**25B-E9P9N104**	—
7.5	10	7.5	10	12	C	**25B-E012N104**	—
11	15	11	15	19	D	**25B-E019N104**	—
15	20	11	15	22	D	**25B-E022N104**	—
18.5	25	15	20	27	E	**25B-E027N104**	—
22	30	18.5	25	32	E	**25B-E032N104**	—

Approximate Dimensions and Weights

Dimensions are in mm (in.) - weights are in kg (lb)

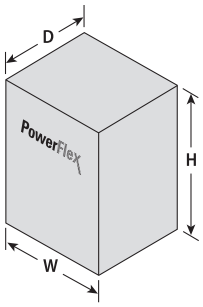

IP20, NEMA/UL Type Open

Frame	H	W	D	Weight
A	152.0 (5.98)	72.0 (2.83)	172.0 (6.77)	1.10 (2.4)
B	180.0 (7.08)	87.0 (3.42)	172.0 (6.77)	1.60 (3.5)
C	220.0 (8.66)	109.0 (4.29)	184.0 (7.24)	2.30 (5.1)
D	260.0 (10.23)	130.0 (5.11)	212.0 (8.34)	3.20 (7.1)
E	300.0 (11.81)	185.0 (7.28)	279.0 (10.98)	12.90 (28.4)

NON-CONTACT LOOP POWERED ULTRASONIC LEVEL TRANSMITTER

LVU800 Series

- **Simple, Fast Setup with Pushbutton Calibration and LCD Display**
- **Three Measurement Ranges Available up to 10 m (32')**
- **6-segment LCD Display Indicates Air Gap or Liquid Level (Inch or Centimeter Units)**
- **7.6 cm (3") Minimum Beam Width for Applications with Restricted Space**
- **NEMA 4X (IP65) Enclosure with Rugged PVDF Transducer**
- **Fail-Safe Intelligence with Diagnostic Feedback for Easy Troubleshooting**

The LVU800 Series general purpose 2-wire ultrasonic transmitter provides non-contact level measurement up to 10 m (32'), and is ideally suited for challenging ultrapure, corrosive or waste liquids. Pushbutton calibrated, the transmitter is broadly selected for atmospheric bulk storage, day tank and waste sump applications. Media examples include wastewater and sodium hydroxide.

SPECIFICATIONS

Range:
LVU809: 10 cm to 3 m (4" to 9.8')
LVU816: 20 cm to 5.5 m (8" to 18')
LVU826: 20 cm to 8 m (8" to 26.2')
LVU832: 30 cm to 10 m (12" to 32.8')
Accuracy: ±0.2% of span
Resolution:
LVU809: 0.5 mm (0.019")
LVU816/826: 1 mm (0.039")
LVU832: 2 mm (0.078")
Beam Width:
LVU809: 5 cm (2")
LVU816/826/832: 7.6 cm (3") diameter
Deadband:
LVU809: 10 cm (4")
LVU816: 20 cm (8")
LVU826: 20 cm (8")
LVU832: 30 cm (12")
Display Type: LCD, 6-digit
Display Units: Inch, cm or percent
Display Mode: Air gap or liquid height
Memory: Non-volatile
Supply Voltage: 12 to 28 Vdc
Loop Resistance: 500 Ω @ 24 Vdc
Signal Output: 4 to 20 mA, 2-wire
Signal Invert: 4 to 20 mA or 20 to 4 mA
Calibration: Pushbutton
Fail-Safety: Selectable 4 mA, 20 mA, 21 mA, 22 mA or hold
Process Temperature: -20 to 60°C (-7 to 140°F)
Temperature Compensation: Automatic
Electronics Temperature: -40 to 71°C (-40 to 160°F)
Pressure: 30 psi (2 bar) @ 25°C, derated @ 1.667 psi (0.113 bar) per above 25°C
Enclosure Rating: NEMA 4X (IP65)
Enclosure Vent: Watertight membrane
Enclosure Material: PC/ABS FR
Transducer Material: PVDF
Process Mount:
LVU809: 1 NPT or 1" G
LVU816/826/832: 2 NPT or 2" G
Mounting Gasket: FKM
Conduit Entrance: Dual, ½ NPT
Classification: General purpose
CE compliance EN 61326 EMC

LVU816, shown smaller than actual size.

To Order

Model No.	Description
LVU809	2-wire transmitter 3 m (9.8') range, display 1 NPT
LVU809-G	2-wire transmitter 3 m (9.8') range, display 1" straight threads
LVU816	2-wire transmitter 5.5 m (18') range, display, 2 NPT
LVU816-G	2-wire transmitter 5.5 m (18') range, display, 2" straight threads
LVU826	2-wire transmitter 8 m (26.2') range, display, 2 NPT
LVU826-G	2-wire transmitter 8 m (26.2') range, display, 2" straight threads
LVU832	2-wire transmitter 10 m (32.8') range, display, 2 NPT
LVU832-G	2-wire transmitter 10 m (32.8') range, display, 2" straight threads
LVM-30	Side mount bracket

Comes complete with operator's manual.
Ordering Examples: LVU816, *2-wire transmitter 5.5 m (18') range, 2 NPT.*
LVU816-G, *2-wire transmitter, 5.5 m (18') range, 2" G connection.*

DRAWING LIST

Screen Cleaner Control Panel (SCCP)

SCCP

SCCP-J01	Panel Layout
SCCP-J03	Swing Out Layout
SCCP-J04	Backpan Layout
SCCP-J06	PLC Layout
SCCP-J09	Front Panel Controls Nameplate Detail
SCCP-J10	Swing Out Controls Layout
SCCP-B01	Network Diagram
SCCP-P01	240VAC Power Distribution Diagram
SCCP-P10	120VAC Power Distribution Diagram
SCCP-E101A	PLC Base Unit, Discrete Inputs, Rack 1, Slot 1 - Wiring Diagram
SCCP-E101B	PLC Base Unit, Discrete Inputs, Rack 1, Slot 1 - Wiring Diagram
SCCP-E101C	PLC Base Unit, Discrete Outputs, Rack 1, Slot 1 - Wiring Diagram
SCCP-E101D	PLC Base Unit, Discrete Outputs, Rack 1, Slot 1 - Wiring Diagram
SCCP-E102	Analog Input Module, Rack 1, Slot 02 - Wiring Diagram
SCCP-VFD01	VFD Control Wiring Diagram
SCCP-VFD02	VFD Control Wiring Diagram

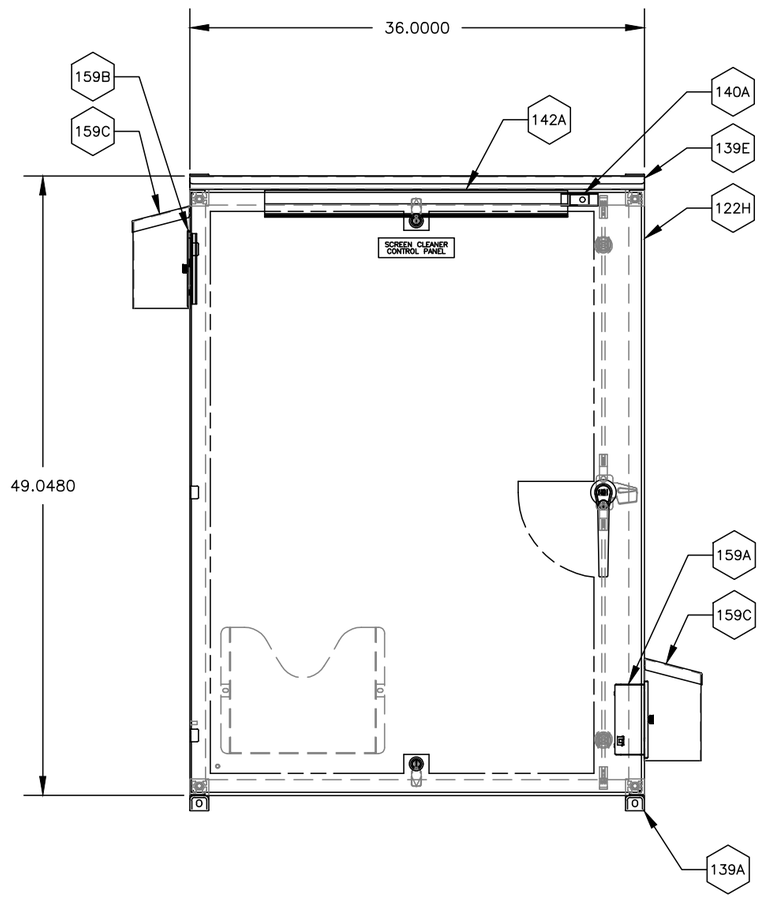

DEPTH OF PANEL = 16"

XXX BOM ITEM NUMBER

REV	DESCRIPTION/INIT	DATE
1.0	SUBMITTAL/JW	6/23/20
1.1	RE-SUBMITTAL	8/17/20

LISTING
☐ UL508 S/N _____
☐ UL698A S/N _____
☐ OTHER _____

TSI Technical Systems Inc.
2303 196TH ST. S.W.
LYNNWOOD, WA. 98036
(425) 775-5696

LEAVENWORTH, WA.

CUSTOMER: WASHINGTON DEPARTMENT OF FISH & GAME

EN / PM / CHK: BC/TH/AP

DRAWN: JW

IPID SNOW CREEK SCREEN DESIGN
SCREEN CLEANER CONTROL PANEL (SCCP)

PANEL LAYOUT

DATE CREATED: 06/22/2020
REV.: 1.1
JOB NO.: 7913
DWG. NO.: SCCP-J01

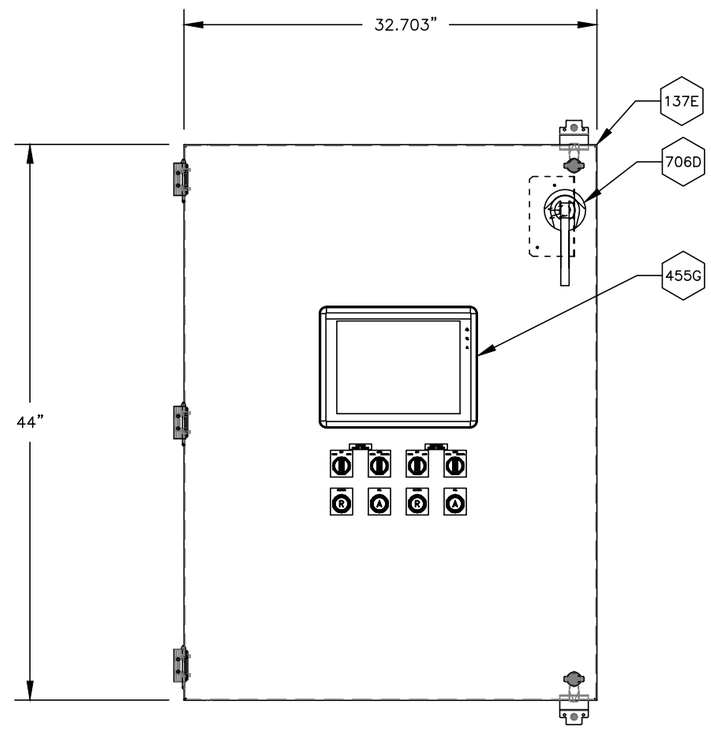

SWING OUT

XXX BOM ITEM NUMBER

REV	DESCRIPTION/INIT	DATE
1.0	SUBMITTAL/JW	6/23/20
1.1	RE–SUBMITTAL	8/17/20

LISTING
☐ UL508 S/N _____
☐ UL698A S/N _____
☐ OTHER _____

TSI Technical Systems Inc.
2303 196TH ST. S.W.
LYNNWOOD, WA. 98036
(425) 775–5696

CUSTOMER
WASHINGTON DEPARTMENT OF FISH & GAME

EN / PM / CHK
BC/TH/AP

DRAWN
JW

LEAVENWORTH, WA.

IPID SNOW CREEK SCREEN DESIGN
SCREEN CLEANER CONTROL PANEL (SCCP)

SWING OUT LAYOUT

DATE CREATED 06/22/2020
REV. 1.1
JOB NO. 7913
DWG. NO. SCCP–J03

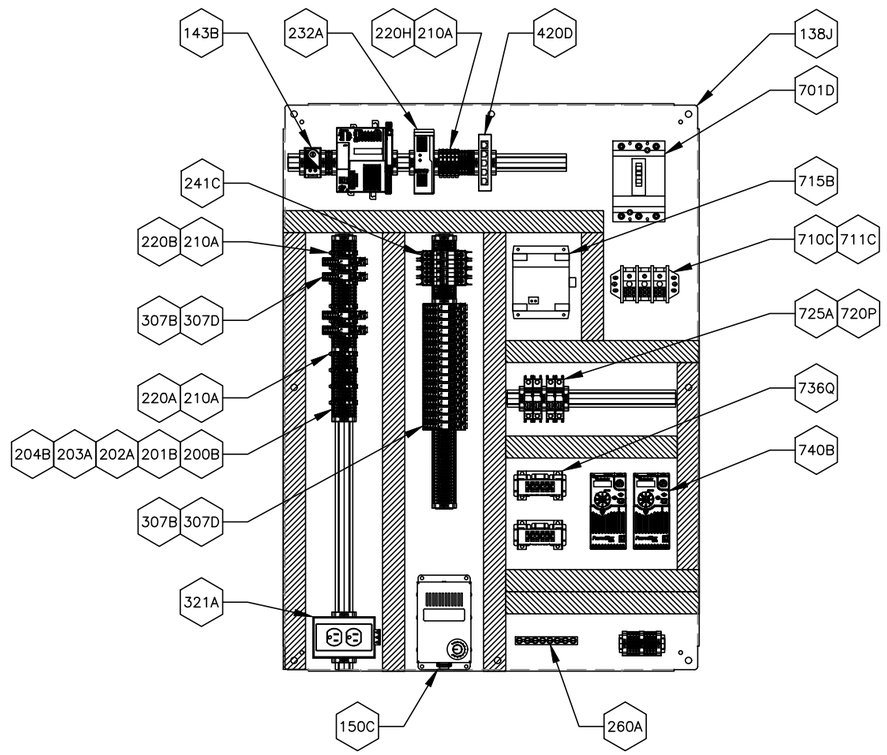

BACKPAN

XXX BOM ITEM NUMBER

REV	DESCRIPTION/INIT	DATE
1.0	SUBMITTAL/JW	6/23/20
1.1	RE–SUBMITTAL	8/17/20

LISTING
☐ UL508 S/N _____
☐ UL698A S/N _____
☐ OTHER _____

TSI Technical Systems Inc.
2303 196TH ST. S.W.
LYNNWOOD, WA. 98036
(425) 775–5696

LEAVENWORTH, WA.

CUSTOMER
WASHINGTON DEPARTMENT OF FISH & GAME

EN / PM / CHK
BC/TH/AP

DRAWN
JW

IPID SNOW CREEK SCREEN DESIGN
SCREEN CLEANER CONTROL PANEL (SCCP)

BACKPAN LAYOUT

DATE CREATED 06/22/2020
REV. 1.1
JOB NO. 7913
DWG. NO. SCCP–J04

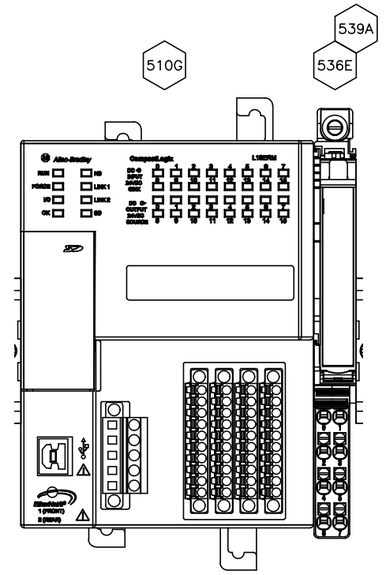

RACK 1

XXX BOM ITEM NUMBER

REV	DESCRIPTION/INIT	DATE
1.0	SUBMITTAL/JW	6/23/20
1.1	RE-SUBMITTAL	8/17/20

LISTING
- ☐ UL508 S/N _____
- ☐ UL698A S/N _____
- ☐ OTHER _____

TSI Technical Systems Inc.
2303 196TH ST. S.W.
LYNNWOOD, WA. 98036
(425) 775-5696

CUSTOMER: WASHINGTON DEPARTMENT OF FISH & GAME

EN / PM / CHK: BC/TH/AP

DRAWN: JW

LEAVENWORTH, WA.

IPID SNOW CREEK SCREEN DESIGN
SCREEN CLEANER CONTROL PANEL (SCCP)

PLC LAYOUT

DATE CREATED: 06/22/2020
REV.: 1.1
JOB NO.: 7913
DWG. NO.: SCCP-J06

XXX BOM ITEM NUMBER

REV	DESCRIPTION/INIT	DATE
1.0	SUBMITTAL/JW	6/23/20
1.1	RE-SUBMITTAL	8/17/20

LISTING
- ☐ UL508 S/N _____
- ☐ UL698A S/N _____
- ☐ OTHER _____

TSI Technical Systems Inc.
2303 196TH ST. S.W.
LYNNWOOD, WA. 98036
(425) 775-5696

CUSTOMER: WASHINGTON DEPARTMENT OF FISH & GAME

EN / PM / CHK: BC/TH/AP

DRAWN: JW

LEAVENWORTH, WA.

IPID SNOW CREEK SCREEN DESIGN
SCREEN CLEANER CONTROL PANEL (SCCP)

FRONT PANEL CONTROLS NAMEPLATE DETAIL

DATE CREATED: 06/22/2020
REV.: 1.1
JOB NO.: 7913
DWG. NO.: SCCP-J09

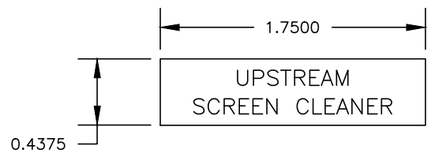

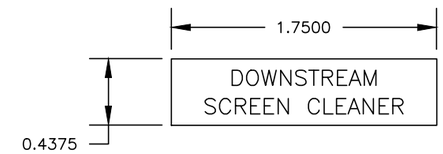

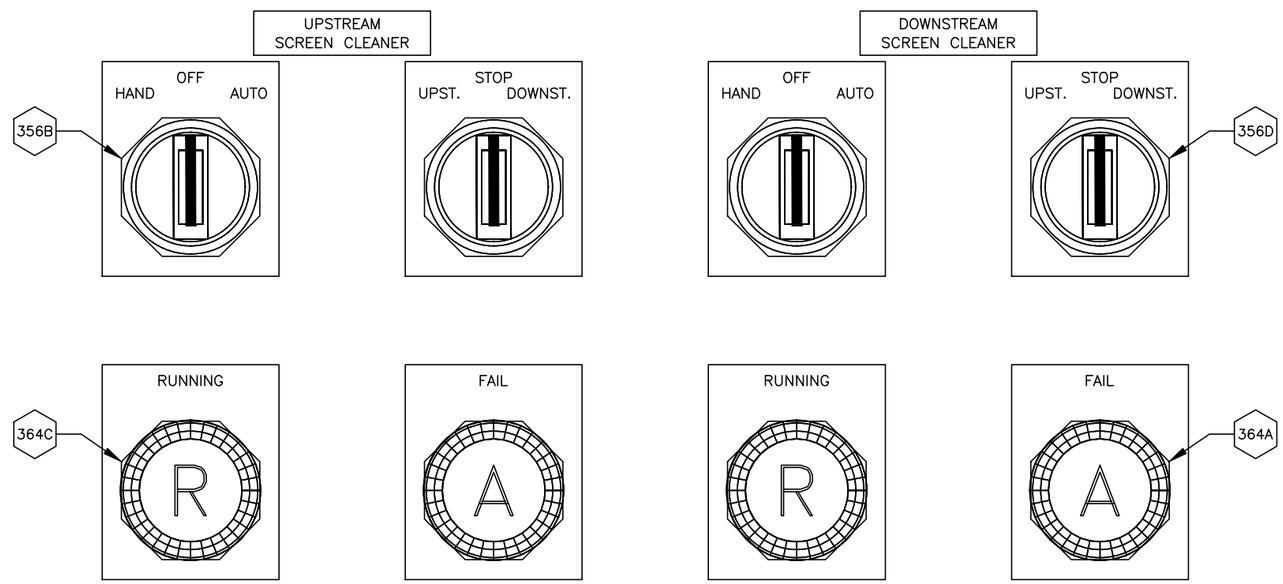

XXX BOM ITEM NUMBER

REV	DESCRIPTION/INIT	DATE
1.0	SUBMITTAL/JW	6/23/20
1.1	RE–SUBMITTAL	8/17/20

LISTING
☐ UL508 S/N _____
☐ UL698A S/N _____
☐ OTHER _____

TSI Technical Systems Inc.
2303 196TH ST. S.W.
LYNNWOOD, WA. 98036
(425) 775–5696

LEAVENWORTH, WA.

CUSTOMER
WASHINGTON DEPARTMENT OF FISH & GAME

EN / PM / CHK
BC/TH/AP

DRAWN
JW

IPID SNOW CREEK SCREEN DESIGN
SCREEN CLEANER CONTROL PANEL (SCCP)

SWING OUT CONTROLS LAYOUT

DATE CREATED 06/22/2020
REV. 1.1
JOB NO. 7913
DWG. NO. SCCP–J10

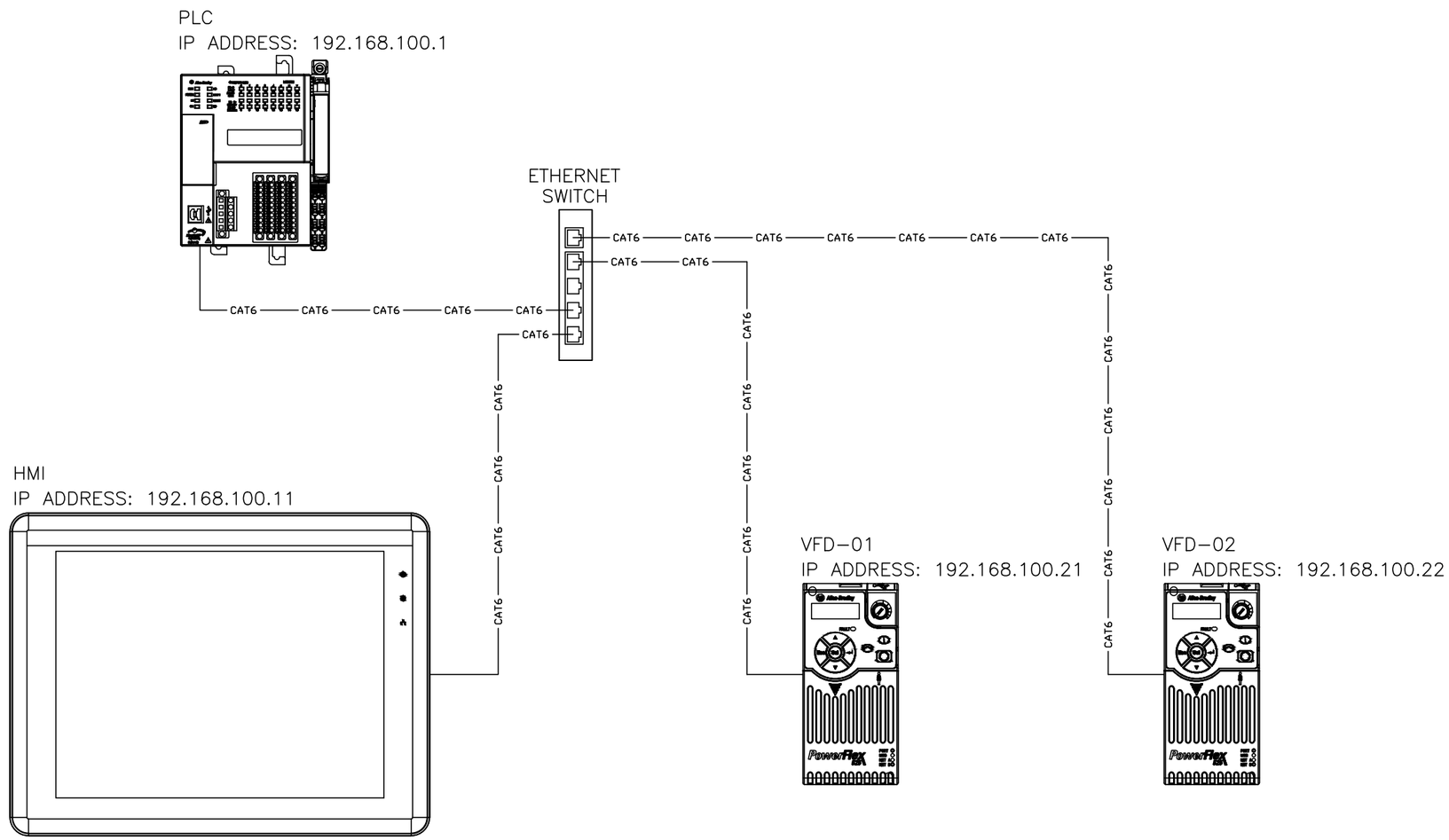

REV	DESCRIPTION/INIT	DATE
1.0	SUBMITTAL/JW	6/23/20
1.1	RE-SUBMITTAL	8/17/20

LISTING
- ☐ UL508 S/N _____
- ☐ UL698A S/N _____
- ☐ OTHER _____

TSI Technical Systems Inc.
2303 196TH ST. S.W.
LYNNWOOD, WA. 98036
(425) 775-5696

CUSTOMER: WASHINGTON DEPARTMENT OF FISH & GAME

EN / PM / CHK: BC/TH/AP

DRAWN: JW

LEAVENWORTH, WA.

IPID SNOW CREEK SCREEN DESIGN
SCREEN CLEANER CONTROL PANEL (SCCP)

NETWORK DIAGRAM

DATE CREATED: 06/22/2020
REV.: 1.1
JOB NO.: 7913
DWG. NO.: SCCP-B01

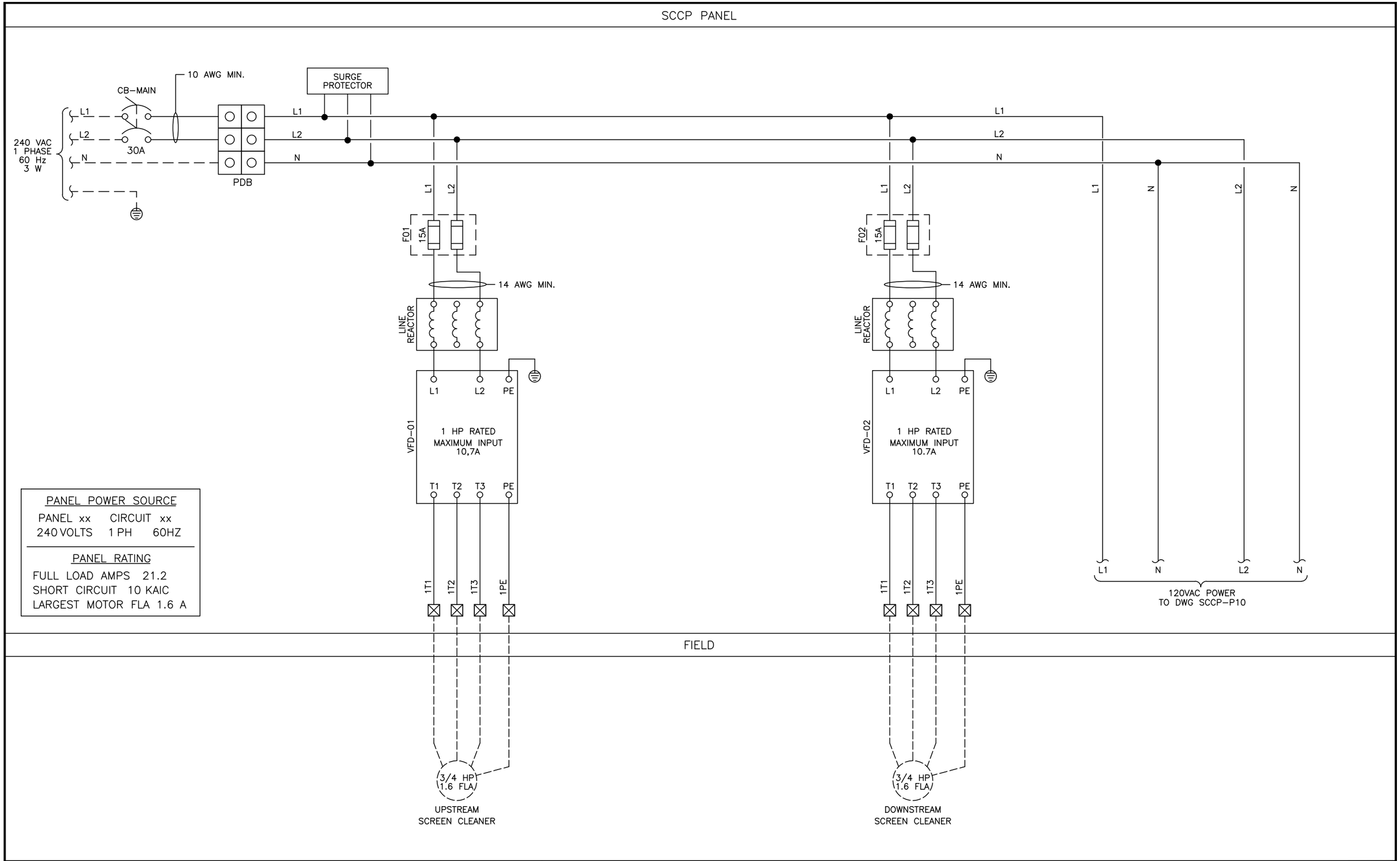

PANEL POWER SOURCE

PANEL xx CIRCUIT xx
240 VOLTS 1 PH 60HZ

PANEL RATING

FULL LOAD AMPS 21.2
SHORT CIRCUIT 10 KAIC
LARGEST MOTOR FLA 1.6 A

REV	DESCRIPTION/INIT	DATE
1.0	SUBMITTAL/JW	6/23/20
1.1	RE-SUBMITTAL	8/17/20

LISTING
☐ UL508 S/N
☐ UL698A S/N
☐ OTHER

TSI Technical Systems Inc.
2303 196TH ST. S.W.
LYNNWOOD, WA. 98036
(425) 775-5696

CUSTOMER: WASHINGTON DEPARTMENT OF FISH & GAME

EN / PM / CHK: BC/TH/AP
DRAWN: JW

LEAVENWORTH, WA.

IPID SNOW CREEK SCREEN DESIGN
SCREEN CLEANER CONTROL PANEL (SCCP)

240VAC POWER DISTRIBUTION DIAGRAM

DATE CREATED: 6/22/20
REV.: 1.1
JOB NO.: 7913
DWG. NO.: SCCP-P01

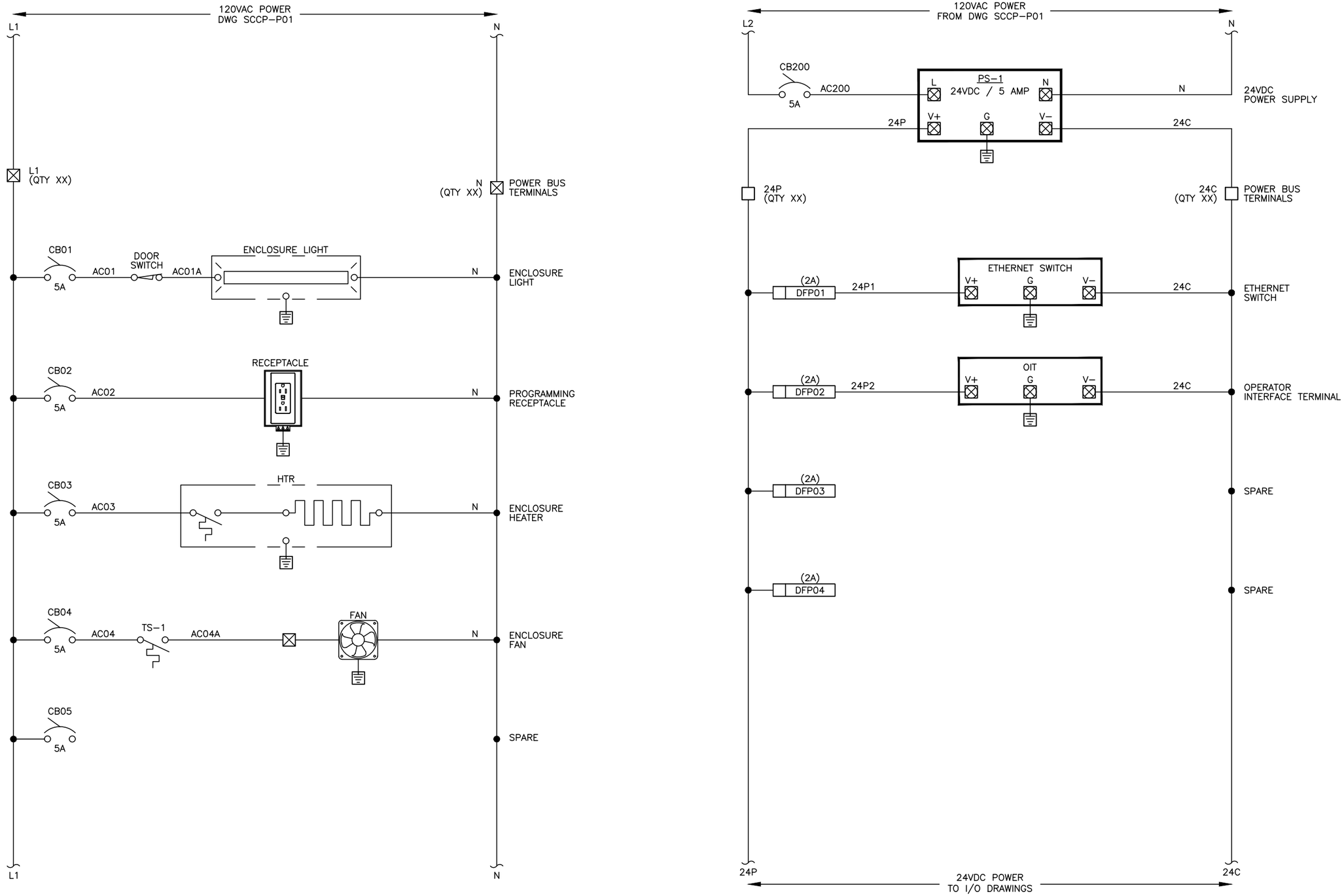

REV	DESCRIPTION/INIT	DATE
1.0	SUBMITTAL/JW	6/23/20
1.1	RE-SUBMITTAL	8/17/20

LISTING
- ☐ UL508 S/N _____
- ☐ UL698A S/N _____
- ☐ OTHER _____

TSI Technical Systems Inc.
2303 196TH ST. S.W.
LYNNWOOD, WA. 98036
(425) 775-5696

LEAVENWORTH, WA.

CUSTOMER
WASHINGTON DEPARTMENT OF FISH & GAME

EN / PM / CHK
BC/TH/AP

DRAWN
JW

IPID SNOW CREEK SCREEN DESIGN
SCREEN CLEANER CONTROL PANEL (SCCP)

120VAC POWER DISTRIBUTION DIAGRAM

DATE CREATED 6/22/20
REV. 1.1
JOB NO. 7913
DWG. NO. SCCP-P10

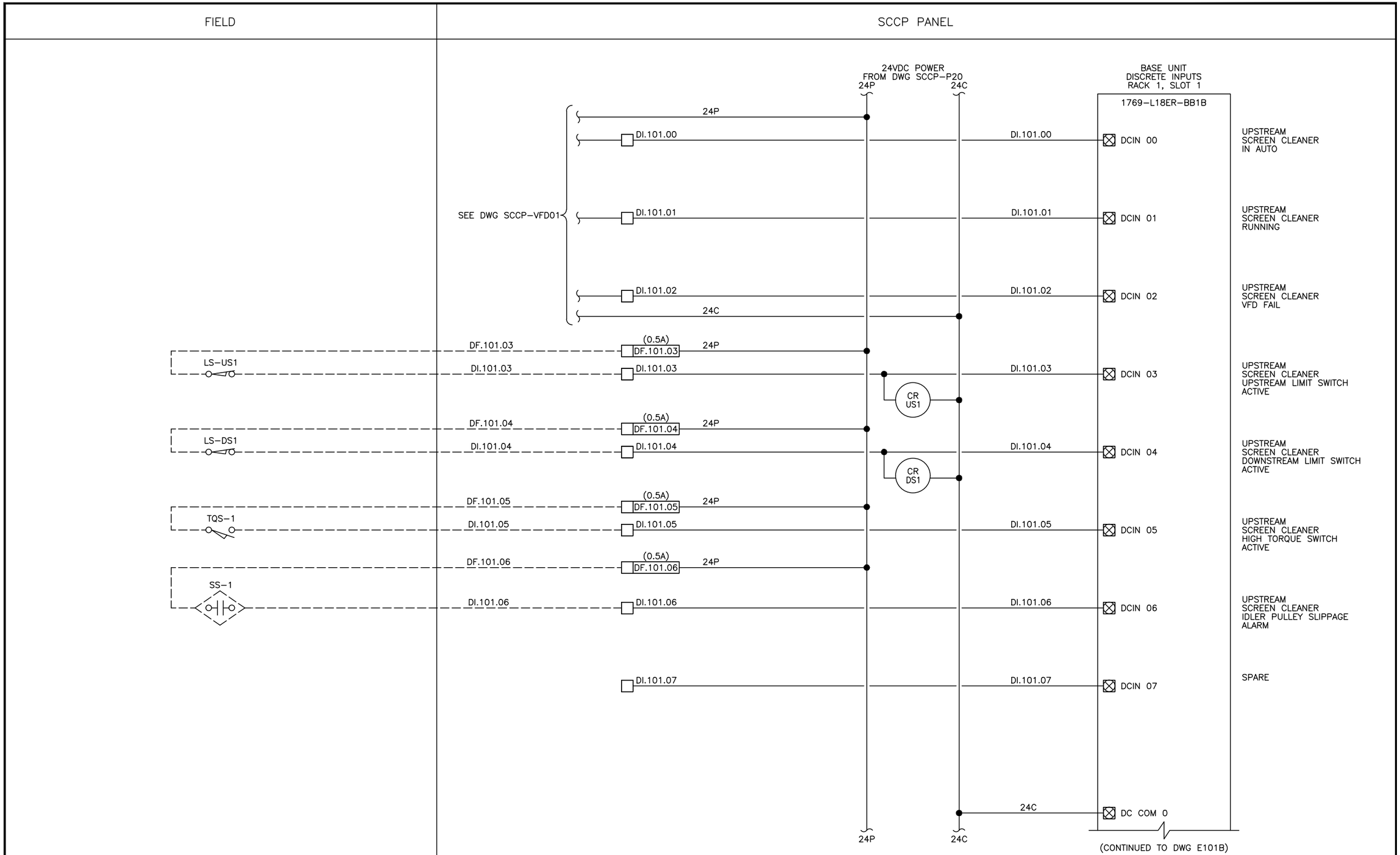

REV	DESCRIPTION/INIT	DATE
1.0	SUBMITTAL/JW	6/23/20
1.1	RE-SUBMITTAL	8/17/20

LISTING
☐ UL508 S/N _____
☐ UL698A S/N _____
☐ OTHER _____

TSI Technical Systems Inc.
2303 196TH ST. S.W.
LYNNWOOD, WA. 98036
(425) 775-5696

LEAVENWORTH, WA.

CUSTOMER
WASHINGTON DEPARTMENT OF FISH & GAME

EN / PM / CHK
BC/TH/AP

DRAWN
JW

IPID SNOW CREEK SCREEN DESIGN
SCREEN CLEANER CONTROL PANEL (SCCP)
PLC BASE UNIT, DISCRETE INPUTS
RACK 1, SLOT 1 – WIRING DIAGRAM

DATE CREATED 06/22/2020
REV. 1.1
JOB NO. 7913
DWG. NO. SCCP-E101A

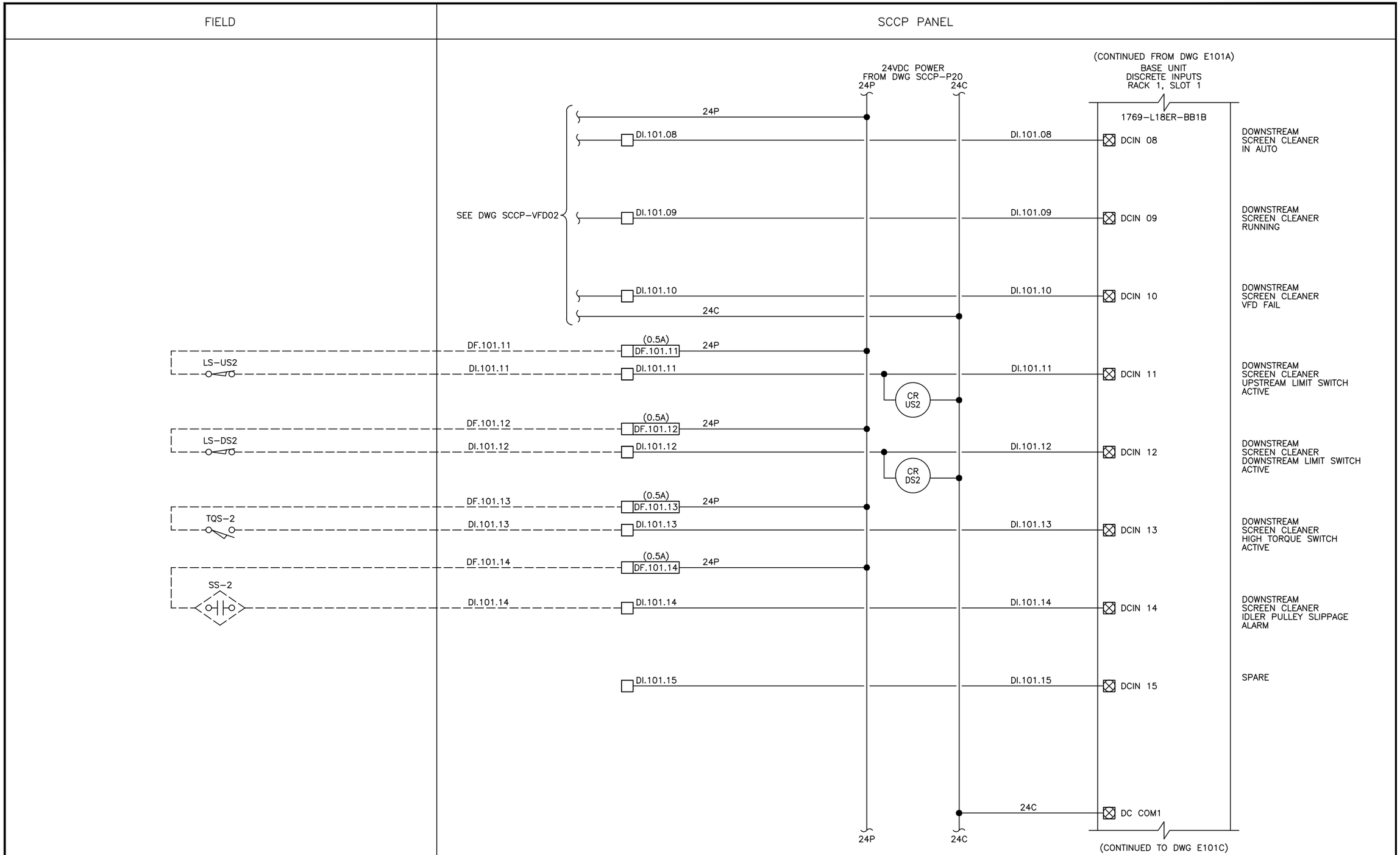

REV	DESCRIPTION/INIT	DATE
1.0	SUBMITTAL/JW	6/23/20
1.1	RE-SUBMITTAL	8/17/20

LISTING
- ☐ UL508 S/N _____
- ☐ UL698A S/N _____
- ☐ OTHER _____

TSI Technical Systems Inc.
2303 196TH ST. S.W.
LYNNWOOD, WA. 98036
(425) 775-5696

LEAVENWORTH, WA.

CUSTOMER: WASHINGTON DEPARTMENT OF FISH & GAME

EN / PM / CHK: BC/TH/AP

DRAWN: JW

IPID SNOW CREEK SCREEN DESIGN
SCREEN CLEANER CONTROL PANEL (SCCP)
PLC BASE UNIT, DISCRETE INPUTS
RACK 1, SLOT 1 – WIRING DIAGRAM

DATE CREATED: 06/22/2020
REV.: 1.1
JOB NO.: 7913
DWG. NO.: SCCP-E101B

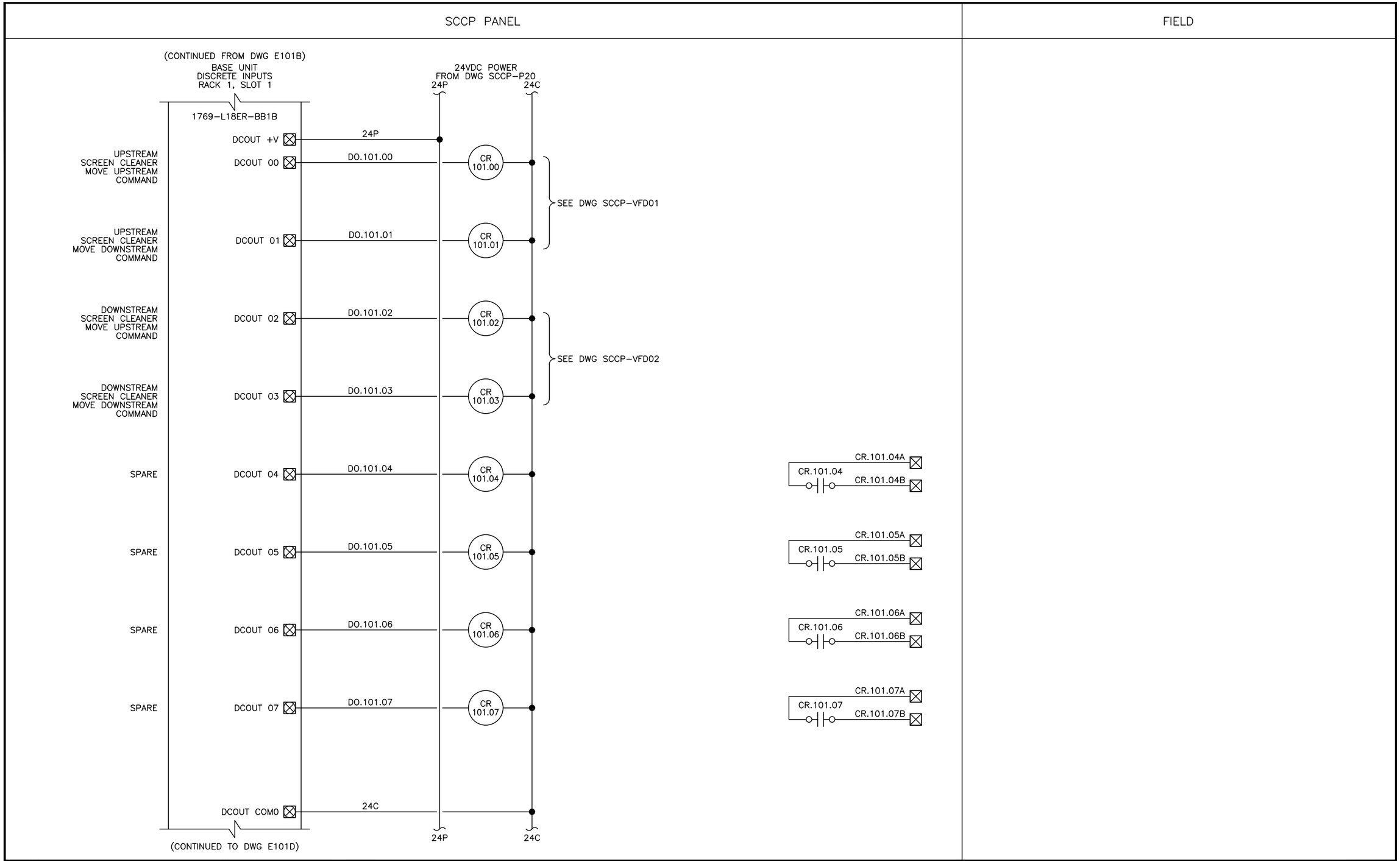

REV	DESCRIPTION/INIT	DATE
1.0	SUBMITTAL/JW	6/23/20
1.1	RE-SUBMITTAL	8/17/20

LISTING
☐ UL508 S/N _____
☐ UL698A S/N _____
☐ OTHER _____

TSI Technical Systems Inc.
2303 196TH ST. S.W.
LYNNWOOD, WA. 98036
(425) 775-5696

LEAVENWORTH, WA.

CUSTOMER
WASHINGTON DEPARTMENT OF FISH & GAME

EN / PM / CHK
BC/TH/AP

DRAWN
JW

IPID SNOW CREEK SCREEN DESIGN
SCREEN CLEANER CONTROL PANEL (SCCP)
PLC BASE UNIT, DISCRETE OUTPUTS
RACK 1, SLOT 1 – WIRING DIAGRAM

DATE CREATED 06/22/2020
REV. 1.1
JOB NO. 7913
DWG. NO. SCCP-E101C

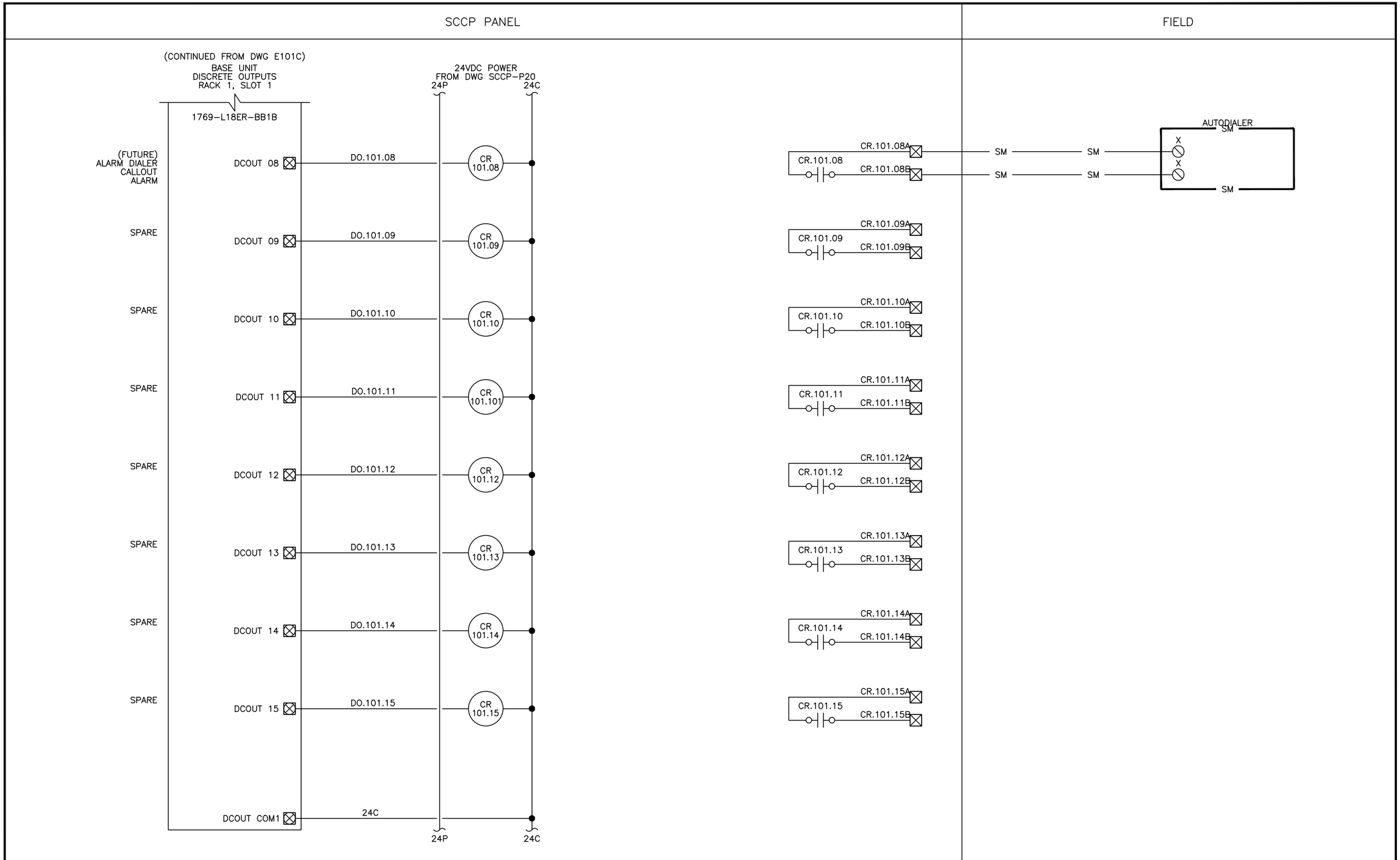

REV	DESCRIPTION/INIT	DATE
1.0	SUBMITTAL/JW	6/23/20
1.1	RE-SUBMITTAL	8/17/20

LISTING
- ☐ UL508 S/N _____
- ☐ UL698A S/N _____
- ☐ OTHER _____

TSI Technical Systems Inc.
2303 196TH ST. S.W.
LYNNWOOD, WA. 98036
(425) 775-5696

LEAVENWORTH, WA.

CUSTOMER: WASHINGTON DEPARTMENT OF FISH & GAME

EN / PM / CHK: BC/TH/AP

DRAWN: JW

IPID SNOW CREEK SCREEN DESIGN
SCREEN CLEANER CONTROL PANEL (SCCP)
PLC BASE UNIT, DISCRETE OUTPUTS
RACK 1, SLOT 1 – WIRING DIAGRAM

DATE CREATED: 06/22/2020
REV.: 1.1
JOB NO.: 7913
DWG. NO.: SCCP-E101D

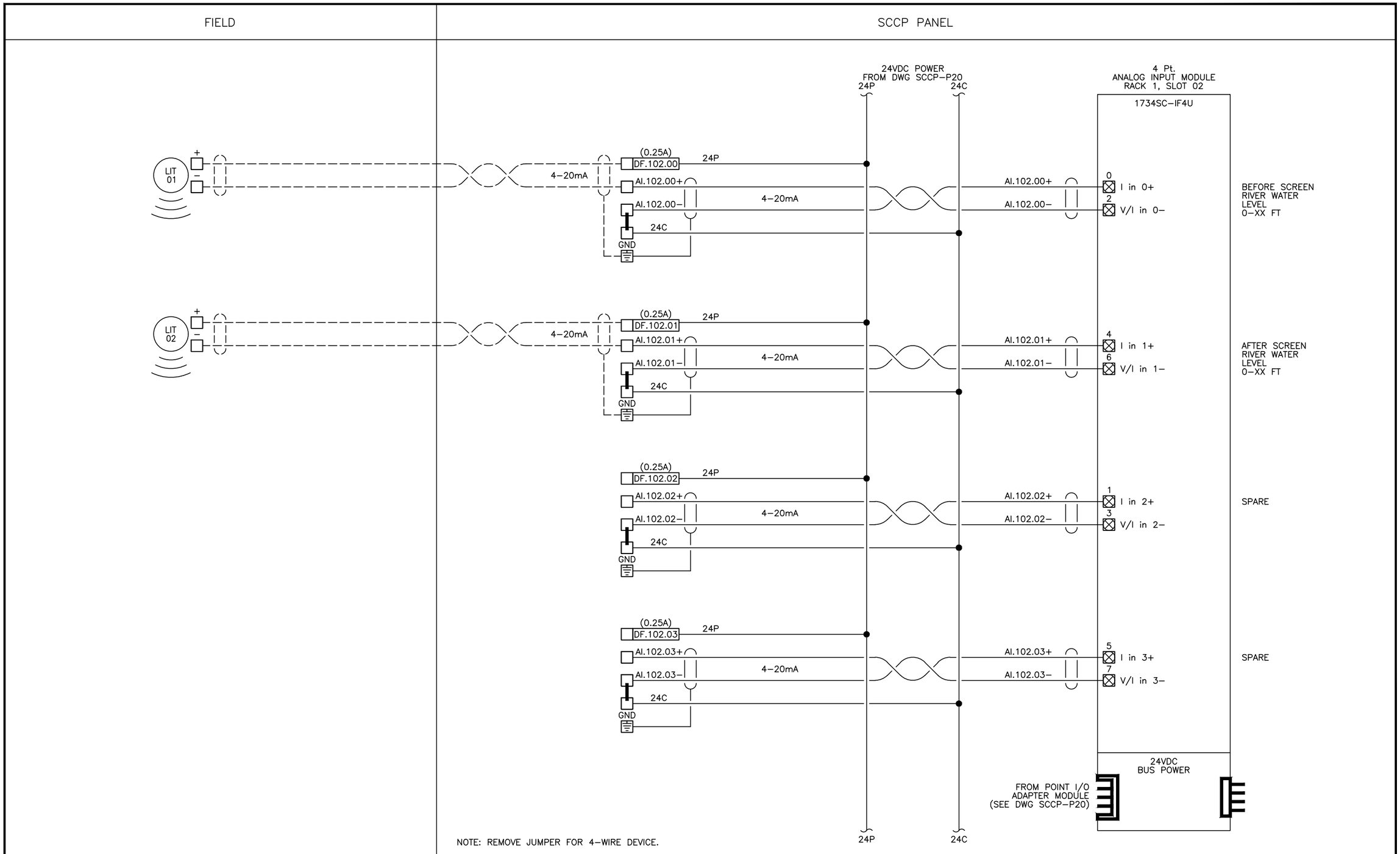

REV	DESCRIPTION/INIT	DATE
1.0	SUBMITTAL/JW	6/23/20
1.1	RE-SUBMITTAL	8/17/20

LISTING
☐ UL508 S/N _____
☐ UL698A S/N _____
☐ OTHER _____

Technical Systems Inc.
2303 196TH ST. S.W.
LYNNWOOD, WA. 98036
(425) 775-5696

LEAVENWORTH, WA.

CUSTOMER: WASHINGTON DEPARTMENT OF FISH & GAME

EN / PM / CHK: BC/TH/AP

DRAWN: JW

IPID SNOW CREEK SCREEN DESIGN
SCREEN CLEANER CONTROL PANEL (SCCP)
ANALOG INPUT MODULE
RACK 1, SLOT 02 – WIRING DIAGRAM

DATE CREATED: 06/22/2020
REV.: 1.1
JOB NO.: 7913
DWG. NO.: SCCP-E102

SCCP PANEL

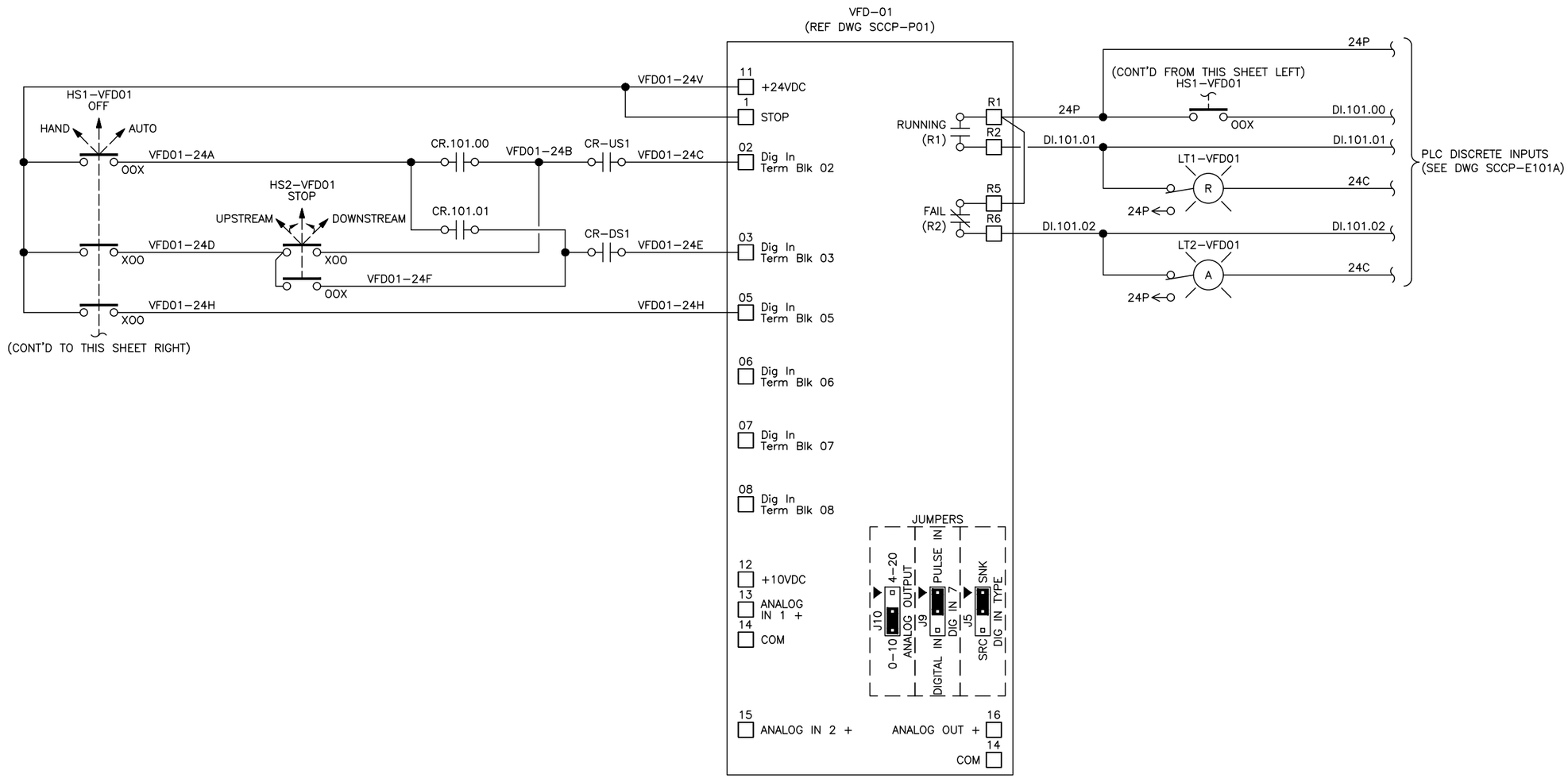

VFD Parameters

PAR #	Description	Value	Units/Description	PAR #	Description	Value	Units/Description	PAR #	Description	Value	Units/Description	PAR #	Description	Value	Units/Description
P034	Motor NP FLA		A	t064	2-Wire Mode	1	Level Sense	C130	EN IP Addr Cfg 2	168	IP B				
P036	Motor NP RPM		RPM	t065	DigIn TermBlk 05	1	Speed Ref 2	C131	EN IP Addr Cfg 3	100	IP C				
P037	Motor NP Power		kW	t066	DigIn TermBlk 06	0	Not Used	C132	EN IP Addr Cfg 4	20	IP D				
P041	Accel Time 1		Sec	t067	DigIn TermBlk 07	0	Not Used	C133	EN Subnet Cfg 1	255	Subnet A				
P042	Decel Time 1		Sec	t068	DigIn TermBlk 08	0	Not Used	C134	EN Subnet Cfg 2	255	Subnet B				
P043	Minimum Freq		Hz	t76	Relay Out 1 Sel	2	MotorRunning	C135	EN Subnet Cfg 3	255	Subnet C				
P046	Start Source 1	2	DigIn TrmBlk	t81	Relay Out 2 Sel	0	Ready/Fault	C136	EN Subnet Cfg 4	0	Subnet D				
P047	Speed Reference 1	5	0-10V Input	t88	Analog Out Sel	16	OutFreq 4-20	C143	EN Comm Flt Actn	2	Zero Data				
P049	Speed Reference 2	6	4-20 mA Input	t95	Anlg In 4-20 Lo	0	%	C144	EN Idle Flt Actn	2	Zero Data				
t062	DigIn TermBlk 02	48	2-Wire FWD	C128	EN Addr Sel	1	Static IP								
t063	DigIn TermBlk 03	0	Not Used	C129	EN IP Addr Cfg 1	192	IP A								

REV	DESCRIPTION/INIT	DATE
1.0	SUBMITTAL/JW	6/23/20
1.1	RE–SUBMITTAL	8/17/20

LISTING
☐ UL508 S/N _____
☐ UL698A S/N _____
☐ OTHER _____

Technical Systems Inc.
2303 196TH ST. S.W.
LYNNWOOD, WA. 98036
(425) 775–5696

LEAVENWORTH, WA.

CUSTOMER
WASHINGTON DEPARTMENT OF FISH & GAME

EN / PM / CHK
BC/TH/AP

DRAWN
JW

IPID SNOW CREEK SCREEN DESIGN
SCREEN CLEANER CONTROL PANEL (SCCP)

VFD CONTROL WIRING DIAGRAM

DATE CREATED 06/22/2020
REV. 1.1
JOB NO. 7913
DWG. NO. SCCP–VFD01

SCCP PANEL

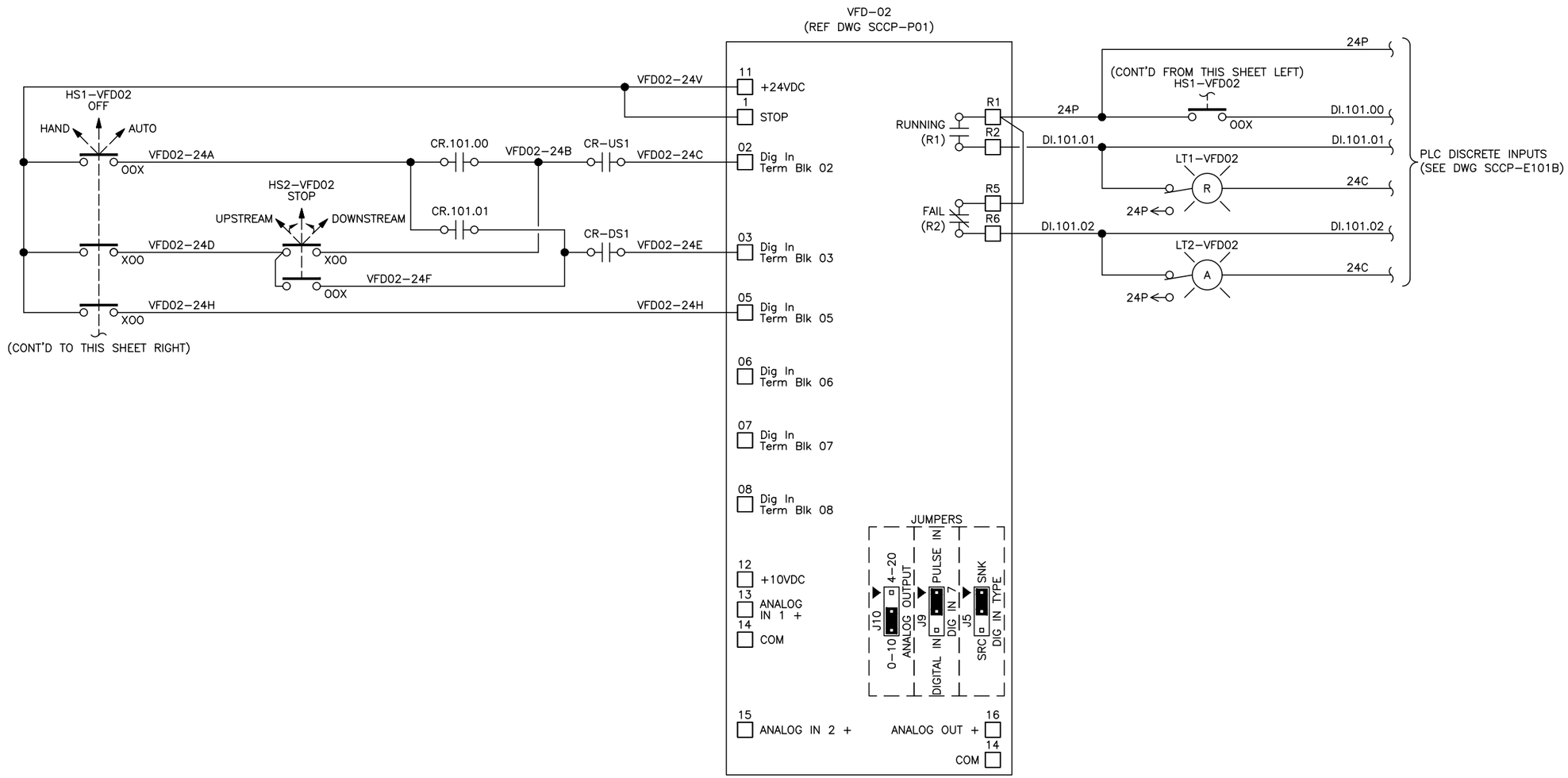

VFD Parameters

PAR #	Description	Value	Units/Description	PAR #	Description	Value	Units/Description	PAR #	Description	Value	Units/Description	PAR #	Description	Value	Units/Description
P034	Motor NP FLA		A	t064	2-Wire Mode	1	Level Sense	C130	EN IP Addr Cfg 2	168	IP B				
P036	Motor NP RPM		RPM	t065	DigIn TermBlk 05	1	Speed Ref 2	C131	EN IP Addr Cfg 3	100	IP C				
P037	Motor NP Power		kW	t066	DigIn TermBlk 06	0	Not Used	C132	EN IP Addr Cfg 4	20	IP D				
P041	Accel Time 1		Sec	t067	DigIn TermBlk 07	0	Not Used	C133	EN Subnet Cfg 1	255	Subnet A				
P042	Decel Time 1		Sec	t068	DigIn TermBlk 08	0	Not Used	C134	EN Subnet Cfg 2	255	Subnet B				
P043	Minimum Freq		Hz	t76	Relay Out 1 Sel	2	MotorRunning	C135	EN Subnet Cfg 3	255	Subnet C				
P046	Start Source 1	2	DigIn TrmBlk	t81	Relay Out 2 Sel	0	Ready/Fault	C136	EN Subnet Cfg 4	0	Subnet D				
P047	Speed Reference 1	5	0-10V Input	t88	Analog Out Sel	16	OutFreq 4-20	C143	EN Comm Flt Actn	2	Zero Data				
P049	Speed Reference 2	6	4-20 mA Input	t95	Anlg In 4-20 Lo	0	%	C144	EN Idle Flt Actn	2	Zero Data				
t062	DigIn TermBlk 02	48	2-Wire FWD	C128	EN Addr Sel	1	Static IP								
t063	DigIn TermBlk 03	0	Not Used	C129	EN IP Addr Cfg 1	192	IP A								

REV	DESCRIPTION/INIT	DATE
1.0	SUBMITTAL/JW	6/23/20
1.1	RE-SUBMITTAL	8/17/20

LISTING
☐ UL508 S/N _____
☐ UL698A S/N _____
☐ OTHER _____

TSI Technical Systems Inc.
2303 196TH ST. S.W.
LYNNWOOD, WA. 98036
(425) 775-5696

CUSTOMER
WASHINGTON DEPARTMENT OF FISH & GAME

EN / PM / CHK
BC/TH/AP

DRAWN
JW

LEAVENWORTH, WA.

IPID SNOW CREEK SCREEN DESIGN
SCREEN CLEANER CONTROL PANEL (SCCP)

VFD CONTROL WIRING DIAGRAM

DATE CREATED 06/22/2020
REV. 1.1
JOB NO. 7913
DWG. NO. SCCP-VFD02