Parametrix
ENGINEERING . PLANNING . ENVIRONMENTAL SCIENCES

719 2ND AVENUE, SUITE 200 | SEATTLE, WA 98104 | P 206.394.3700

ALTERNATIVES IDENTIFICATION

DATE: December 30, 2020

TO: Keli McKay-Means

FROM: Ian Sutton

PROJECT NUMBER: 553-1578-151

PROJECT NAME: Olympic View Transfer Station
Facility Master Plan

Potential facility modification and improvement alternatives have been identified for the Olympic View Transfer Station (OVTS) based on the facility operations and functionality assessment performed during Task 1 and applying the requirements developed during the Facility Programming/Needs Statement under Task 2 of the scope of work.

One outcome of the previous evaluations was an identification of operational practices that that could be changed to manage the increasing service demands at OVTS. This memorandum does not address operational practices, but instead is focused on physical modifications to the OVTS site to improve capacity and efficiencies to reduce the reliance on staff operations. Figures for the potential facility modification and improvement alternatives are included in Attachment A.

An Alternatives Screening Matrix was developed to provide a high-level identification and evaluation of potential improvements and is included as Attachment B to this memorandum. Seventeen alternative improvement categories were identified, with some categories having multiple options for a total of 29 alternatives. Evaluation criteria included:

- Improved Operator and Customer Health and Safety
- Improved Customer Convenience
- Improved Operational Capacity
- Improved Operational Reliability, Flexibility and Efficiency
- Reduced Environmental Impacts
- Increased Operational Cost
- Reduced Operational Cost
- Increased Maintenance Cost
- Reduced Maintenance Costs
- Impacts to Operation During Construction
- Difficulty in Securing Permits
- Capital Cost
- Impacts to Off Site Property and Surrounding Infrastructure
- Urgency to Implement
- Requirement for Coordination with Other Parties, and
- Coordination Requirements with Other Potential Improvements

DRAFT

Evaluation criteria were rated as not applicable, low, medium, or high for each alternative and discussed in a workshop with Kitsap County Solid Waste Division personnel. The 29 alternatives were reduced to the following seven alternatives, ranked in decreasing priority, to be evaluated in more detail.

1. Dedicated Facility Backup Power
2. Re-engineer Surface Water Management System
3. Second Outbound Scale and Exit Lane with Scale Facility Drainage Improvements
4. Add Second Compactor at the Existing Top Load Bay
5. Expanded Intermodal Container Yard over Pond A and to the East of Pond A
6. Expanded Transfer Building and Self-Haul Customer Tipping Area to the East
7. Add a Second Self-Haul Customer Tipping Area outside of the Transfer Building

The detailed analysis includes graphic and narrative descriptions of the selected potential facility improvements along with a planning-level opinion of probable cost (OPC) for the alternative. A summary of the strengths, weaknesses, and other important considerations is included in each narrative. With the exception of the Re-Engineer Surface Water Management System Improvements, Figure 1 shows the location of the evaluated improvements within the OVTS site.

Dedicated Facility Backup Power

The dedicated facility backup power concept was initially reviewed as part of the 2019 OVTS Facility Inspection. The details of that preliminary assessment have been reiterated below.

The electrical distribution system modifications for backup power supply are assumed to include the transfer building (excluding the compactor(s)), transfer station office building, scale facility and site systems, such as site lighting and lift stations. Based on the facility electrical one-line diagram and load schedules from the original facility design, it was determined that the preferred design would be to feed the three main circuits through separate automatic transfer switch (ATS) equipment, after the main switchboard, with one generator. The requirements are detailed below:

1. A new generator switchboard would be included to accommodate the three ATS connections.
2. The switchboard would isolate the compactor, eliminating the shunt trip modifications required for other options.
3. The separate ATS circuits would use three steps in the equipment startup. The steps would not have to be staggered by much time, and they would follow the logic below.
   a. Step 1: MCC-1—The transfer building exhaust fans are located at the roof and should not be a safety concern during an automatic restart.
   b. Step 2: Panel LB/Panel LC—This is the larger of the two transformers, and it would be activated first, bringing the transfer station office building, scale facility, and site systems online.
   c. Step 3: Panel HA/Panel LA—This would turn on lights for the transfer building and mechanical spaces.

This three-step option requires modifying MCC-1 to add a delay to 5 of the 10 transfer building exhaust fans to avoid the voltage drop that would be created by an initial step that activated all 10 transfer building exhaust fans at once. The generator would have a standard sound enclosure and a minimum 24-hour fuel tank.

Cummins was consulted as a potential equipment manufacturer to preliminarily size and cost the option. Equipment type and associated planning level costs for this option are shown below.

- 230kW Generator at $70,000
- (3) 225A Automatic Transfer Switches at $20,000
- MCC Bucket Modifications at $5,000

The equipment identified are based on existing site conditions. Final sizing of equipment needs to consider other, future facility improvements to account for those anticipated loads.

Two potential locations for the generator were considered during the evaluation as shown on Figure 2. Location Option A is in close proximity to the transfer building electrical room and provides the most efficient electrical operation. However, Option A is in a location within the intermodal yard where there is a high demand for space. These competing demands, as generally shown on Figure 7, already include equipment fueling, container storage, special waste area top load, and wastewater management.

Alternatively, the location of Option B is well outside of the high demand operating area within the intermodal yard. The further distance from the electrical room would result in some voltage drop. To overcome this, the conductors would need to be increased in size/quantity with additional cost associated with the duct bank and wire. A preliminary cost for conduit and wire only for moving the generator to the north would add around $30,000. The additional trenching, pavement restoration and generator pad area preparation could add another $20,000. The expense associated with Option B may be warranted for the reduced impact to daily operations and the additional protections afforded the equipment at the more remote location. Both locations will require coordination with the site operator during construction.

The costs above do not include equipment installation or other site improvements, such as a foundation and base costs for conduits and cabling. A planning level cost for equipment and installation associated with Option A ranges between $200,000 and $250,000. Option B has a planning level cost ranging between $250,000 and $300,000. Engineering and construction oversite costs would be in addition to these costs.

Additional OVTS electrical and generator manufacturer information has been provided as Attachment C.

Re-engineer Surface Water Management System

A high-level analysis of two options to improve surface water management at OVTS was performed for the site. The options include a gravity infrastructure reconfiguration and the addition of a new pump alternative to improve the distribution of runoff to onsite ponds. The stormwater analysis has been documented in an OVTS Stormwater Management Alternatives Memorandum which is included as Attachment D. The memorandum is summarized below.

The gravity alternative will require a number of storm drainage infrastructure modifications to redistribute runoff previously directed to Pond D to the larger and more effective infiltrating Pond B. Site improvements will consist of lowering the Pond B bottom elevation 12 inches, installing 580 feet of new storm drain pipe, installing 3 new catch basins, installing a new oil/water separator, abandoning 300 feet of existing storm drain pipe, and modifying 4 existing catch basins. The preliminary construction cost for this alternative is approximately $315,000. Operation and maintenance (O&M) costs to maintain the infrastructure should be similar to the current system;

however, the expense associated with the emergency pumping from Pond D to eliminate an overflow condition would be eliminated. The improvements are more widespread through the site and will have a greater impact on ongoing operations during construction than the pump alternative.

The pump alternative maintains the existing runoff configuration and adds a pump station to Pond D with redistribution piping to Ponds B and C. A preliminary design for the stormwater pump station was prepared in consultation with manufacturer Romtec Pumping Systems (Romtec). The preliminary construction cost for this alternative is $487,000, including the costs associated with related site improvements for conveyance piping and power to the station.

O&M costs should decrease through elimination of the expense associated with the emergency pumping from Pond D to avoid an overflow condition; however, there will be maintenance requirements for the pump station, along with cost for power and future equipment replacement. The pump station should be inspected every 6 months for needed maintenance and repairs. In total, annual O&M is estimated to be somewhere between $1,000 and $2,000. The pump is expected to last at least 20 years with proper maintenance and replacement costs can be annualized and included with O&M costs.

Both alternatives will improve the existing stormwater conditions and prevent Pond D from overflowing offsite. The gravity approach will be less expensive to install and easier to maintain. The main advantage of the pump alternative is the flexibility to distribute Pond D water to either Pond B or C. The gravity alternative has more resilient infrastructure, but the pump alternative has a more resilient operational flexibility. The pump alternative may also cause fewer disruptions during construction. Runoff contamination will need to be addressed regardless of which alternative is chosen to prevent potential fouling of the effective infiltration rates of Ponds B and C.

Second Outbound Scale and Exit Lane with Scale Facility Drainage Improvements

The addition of a second 80-foot outbound scale and exit lane to reduce the exit queue length is shown in Figure 3. The position of the new scale is offset to the north from the existing outbound scale. The shift is required to provide a bypass lane without interference with the existing Brem-Air Disposal entry. The existing bypass lane will become the exit lane for the new scale. The new bypass lane will require some infill of Pond B; however, as identified in the Re-engineer Surface Water Management System evaluation, Pond B has excess capacity and should be able to accommodate the infill without negative impacts to the surface water management system.

The location remains proximate to the scale house and visible to attendants. The ability for attendants to observe the new scale will be most beneficial if the new scale is used by self-haul customers. Self-haul customer use is assumed to be for customers paying with credit cards only, not requiring a transaction with a scale attendant.

A critical aspect of the new scale location is the required acquisition of a portion of the Brem-Air Disposal property which is leased from the Port of Bremerton. If the property is unavailable, the new scale proposed location will not be feasible and other alternatives will need to be considered. Moving the new scale further north will be problematic due to the curve in the exit roadway which will eliminate a straight approach to enter the scale. A straight approach is important to avoid vehicle misalignment and trailer swings that can result in damage to vehicles and infrastructure at the scale side rails and protective bollards.

DRAFT

A remote scale location may be an option; however, its use would likely need to be restricted to commercial customer use only. Determining an efficient remote location is challenging due to the constrained site, existing site traffic circulation, and the potential impact of other future site improvements.

Drainage improvements at the existing scale facility will likely consist of strategically placed area and or trench drains with pipe connections to the existing surface water management system. Some drainage improvements have been made to the facility which are not shown in the Re-engineer Surface Water Management System evaluation; however, the improvements have not fully resolved the ponding issue. If the inverts of the existing surface water management system are incompatible, a new outlet to Pond B may be required.

The scale and lane installation may be approachable from Pond B, limiting interference with regular site operations during construction; however, work that is proximate to the existing outbound scale may be required after hours. The drainage improvements will likely require after hours work. It may be possible to temporarily use one of the inbound scales as the outbound scale which could allow the construction to use the entire outbound area during operating hours.

A planning level OPC for the second outbound scale and exit lane with scale facility drainage improvements is estimated at $692,000, which does not include property acquisition. A breakdown of the estimate is included in Attachment E.

Second Compactor at the Existing Top Load Bay

The second compactor is assumed to be an SSI 4500 SPH compactor which is the same as the existing compactor. A typical compactor layout with the addition of the container chassis for both the existing compactor and proposed new compactor has be shown in Figure 4.

The second compactor has been located in the existing transfer building top load bay (north bay) which will reduce the facility retrofits required to accommodate the new equipment. The configuration has the container chassis to the north to avoid conflict with the transfer building structure at the location of the existing compactor bay to the south. This configuration also places the hydraulic power units (HPUs) of both compactors adjacent to each other. The existing compactor HPU is sheltered in an alcove with the transfer building wall. The new compactor will need similar weather protection which can be provided by a canopy, as shown on Figure 4 and Figure 5.

Retrofits to the existing facility are expected to include structural foundation supports and anchoring for the compactor, power and telecommunications connections to the compactor, and the installation of a top load chute with structural support and armoring. Figure 5 shows a typical layout for the top load bay chute reconfiguration.

Operational impacts resulting from the second compactor installation unrelated to the compactor itself will primarily include reduced container storage space, elimination of a pull through option at the special waste area top load bay, and elimination of the north top load bay within the transfer building which has historically be used for disposal of large, bulky items not suited to be processed through the compactor.

Container storage implications are discussed in detail in the following intermodal yard section. The pull through option for the special waste area top load bay has not been typically utilized and has been fenced off; therefore,

the loss of this access is likely not critical. An available option for the disposal of large, bulky items will still be needed on site. One option could be the transition of the special waste area to the new top load bay for bulky items. The special waste area is currently used for recycling consolidation; however, the operation is not directly related to OVTS and could be terminated. A second option for bulky items could be an at grade container. The second option would require a frontend loader, or other equipment, capable of placing material into the container.

Compactor installation will require coordination with the site operator during construction in both the intermodal yard and on the receiving floor of the transfer building. The construction will likely reduce the available space for waste storage on the receiving floor and container storage in the intermodal yard; however, waste processing through the existing compactor should be able to be maintained.

A planning level OPC for the second compactor is estimated at $5,196,000, which does not include resurfacing of the receiving floor in front of the new compactor chute. A breakdown of the estimate is included in Attachment E.

Expanded Intermodal Yard over Pond A and to the East of Pond A

The baseline container capacity of the intermodal yard was estimated based on aerial imagery and observed asphalt wear. The existing capacity and alternative capacities are shown on Figure 7. The capacities are estimated through identification of container stalls and the assumption that half the locations are stacked with empty containers and half the locations are stacked with full containers. Empty containers and full containers are assumed to be stacked 4 and 3 containers high, respectively.

The intermodal yard expansion is planned to the south. The expansion will be approximately 8,500 square feet and consume most of the existing Pond A area and excavate into the adjacent slope to the east, towards the Brem-Air Disposal facility. Pond A acts as a surface water management buffer for the lower area of the site. The pond has some storage capacity; however, the lower area stormwater is pumped to Pond C which has ample capacity with or without Pond A. It is likely that Pond A can be removed, or decreased in size, without negatively impacting the site wide surface water management. The Re-engineer Surface Water Management System section provides more information on the current role of Pond A.

Excavation into the east slope will require a retaining wall up to approximately 17 feet in height. The height will require a reasonable setback from the property line to allow for wall tie-backs, depending on wall type. There will also need to be some adjustments to site lighting and storm drainage systems.

The existing layout and three alternatives are listed below along with the associated container capacities.

- Existing Intermodal Yard, 182 containers
- Expanded Intermodal Yard, 248 containers
- Existing Intermodal Yard with Second Compactor, 158 containers
- Expanded Intermodal Yard with Second Compactor, 224 containers

The expansion construction will require coordination with the site operator during construction due to the unavailability of the southern area for container storage. More frequent rail car switches may temporarily be required to offset the limited onsite container storage.

DRAFT

A planning level OPC for the expanded intermodal yard is estimated at $602,000. A breakdown of the estimate is included in Attachment E.

Expanded Transfer Building Tipping Area to the East

Figure 8 and Figure 9 show a basic layout for transfer building expansion. Figure 12 shows the perspective view of the expansion. The primary challenges related to this type of expansion are identified below.

- The expansion will require relocation, or replacement, of the transfer station office building and bulky recyclables collection.
- The expansion does not replace the large clear span moment frames within the transfer building. The existing columns would remain in place limiting the expanded area maneuverability or making the space a through lane. Vehicle maneuvering is shown in Figure 28.
- The sanitary lift station would need to have the electrical panel relocated and the structures reconfigured to provide traffic rating.
- The roofs are pitched which limits the extent of the expansion based on required roll-up door height, unless a reverse pitch was incorporated.

The layout would provide for additional unloading area for self-haul customers. Currently, the east portion of the self-haul tipping floor is used for the collection of electronics and also contains a large roll-off container for other materials diversion. Expanding the self-haul tipping floor would create designated space for these collection areas, preserving more space for customer unloading in the existing clear span area.

The expansion of the commercial tipping floor does relocate the existing through lane into the expanded area, preserving more of the existing building for unloading and refuse storage. This approach works best for the commercial collection vehicles. Large semi-truck and trailer combinations lack the maneuverability needed for the new area and would still require coordination to access the main receiving floor. Damage to the exposed interior columns and to vehicles is a concern with this alternative.

Figure 15 and Figure 16 present an alternative option to the basic expansion of the transfer building. The option expands the self-haul customer area to provide full use of the clear span area by customers, relocates or replaces the transfer station office, and provides roll-up doors along the east exterior of the transfer building for commercial customer back-in access. This configuration also provides for complete clear span usage of the commercial tipping floor for waste handling without the expense of a full building expansion. Reducing commercial vehicle operation on the tipping floor may also reduce contamination track out.

Both options provide for full use of the clear span area for waste handling operations. A planning level OPC for the expanded transfer building and revised east access with self-haul expansion are estimated at $9,240,000 and $3,919,000, respectively. Breakdowns of the estimates are included in Attachment E.

Remote Self-Haul Customer Tipping Area outside of the Transfer Building

Another option to increase site capacity for self-haul customers would be to add a remote drop-off location. Figure 23 and Figure 24 show two refuse sheds located at existing Pond C. The refuse sheds would be similar to the top load refuse sheds at the County's Silverdale Recycling and Garbage Facility and provide eight additional

DRAFT

unload stalls for customers to drop-off refuse into four roll-off containers that would be hauled to and emptied at the transfer building when full. Some of the primary challenges with the remote drop-off area are below.

- The hauler access for container switch out at this location will require property acquisition from the Port of Bremerton. Vehicle maneuvering is shown on Figure 28.
- Being remote from the remainder of the site operations, the location would require an additional staff person to monitor and direct customers. The remote area could have limited open hours reducing the need for the additional staff member to days or hours with peak self-haul customer traffic, such as on the weekends.
- A large portion of Pond C will be filled. Pond C does have some additional capacity; however, the Port of Bremerton property acquisition could include additional space to replace consumed pond capacity.
- Exit traffic from the remote area does create a traffic crossing requirement. Exiting traffic from both the transfer building and remote area will need to have an alternating merger to access the outbound scale.

A planning level OPC for the remote tipping area is estimated at $1,354,000. A breakdown of the estimate is included in Attachment E. The cost does not include property acquisition.

Cost Considerations

The planning level OPC discussed above was developed using different formats for the various potential facility modification and improvement alternatives. Table 1 has been provided below to consolidate the costs for the alternatives and to provide a uniform comparison with contingency, tax, and professional service costs.

Table 1. Costs of Site Improvement Alternatives

Alternative	Construction	Contingency	Tax	Professional Services	Total
Backup Power	$200,000	$50,000	$23,000	$55,000	**$327,000**
Remote Backup Power	$250,000	$50,000	$27,000	$65,000	**$392,000**
Gravity Stormwater	$242,000	$73,000	$28,000	$69,000	**$412,000**
Pump Stormwater	$374,000	$112,000	$44,000	$106,000	**$636,000**
Second Outbound Scale	$441,000	$88,000	$48,000	$115,000	**$692,000**
Second Compactor	$3,579,000	$716,000	$387,000	$515,000	**$5,196,000**
Intermodal Yard Expansion	$383,000	$77,000	$41,000	$100,000	**$602,000**
Expanded Transfer Building	$5,887,000	$1,177000	$636,000	$1,540,000	**$9,240,000**
Expanded Self-Haul with East Commercial Access	$2,497,000	$499,000	$270,000	$653,000	**$3,919,000**
Remote Self-Haul Tipping	$863,000	$173,000	$92,000	$226,000	**$1,354,000**

DRAFT

Potential Second County-Owned Transfer Station

As an alternative, or in addition, to making facility modifications and improvements to OVTS, the County may want to consider a second transfer station similar to OVTS strategically located elsewhere in Kitsap County. A second transfer station would greatly reduce the demands on OVTS and provide significant system resiliency if one of the two transfer stations experienced a service disruption. A service disruption, such as an issue with access, facility repairs, or a damaged facility, would allow for temporary redirection of customers to the functional transfer station.

The development of a second transfer station would require a siting analysis and facility master plan. OVTS functions as a transfer station and an intermodal facility. Under current conditions, OVTS likely does not have the long-term intermodal capacity to additionally accept pre-compacted containers from a second transfer station. The second transfer station would benefit from having dedicated rail access pending site availability. If rail access is not feasible, a separate intermodal facility would need to be developed or contracted in tandem with the development of the new transfer station. There is existing intermodal capacity at the North Mason Fiber yard south of OVTS.

The development of a second County-owned transfer station would likely require 8 to 10 or more years for siting, design, and construction. If siting challenges are encountered, the duration could increase significantly. Depending on facility size, capacity, and other functionality requirement, costs for development could range from $20,000,000 to $30,000,000 or more, not including property acquisition. A second transfer station would also require O&M costs similar to those currently experienced at OVTS.

There should be some additional long-term environmental benefits to have a second transfer station based on the reduced waste transport distances which would otherwise need to go to OVTS which is located in the southern most portion of Kitsap County.

In accordance with the Facility Programming/Needs Statement under Task 2, an un-improved OVTS should be able to process approximately 362,000 tons per year (tpy) of municipal solid waste (MSW). The 2018 amount of MSW received at the facility was approximately 250,000 tpy. Projected tonnage over a planning period to 2048, considering a Capital Facilities Plan for Kitsap County 2016 Comprehensive Update (2016 CFP) approximate 1 percent growth rate and a general 3 percent growth rate, ranges between approximately 341,000 tpy and 609,000 tpy. At a 1 percent growth rate, OVTS should have MSW disposal capacity through 2048. At a 3 percent growth rate, MSW processing demands will likely exceed the available capacity in 2031.

OVTS capacity is primarily constrained by available tipping/receiving floor space to accommodate customers, having only one compactor to process MSW, and the availability of the rail export operation. As waste tonnage and traffic increases over the long-term, site circulation constraints could also become a factor. Assuming rail can accommodate the growing transport requirements, adding a second compactor and providing additional tipping capacity should allow OVTS to effectively serve the entire county well into the future. Additional operational changes beyond the improvements herein can also increase capacity. There would continue to be system risk with the sole reliance on OVTS to handle all waste within Kitsap County.

DRAFT

Attachment A

Figures

DRAFT

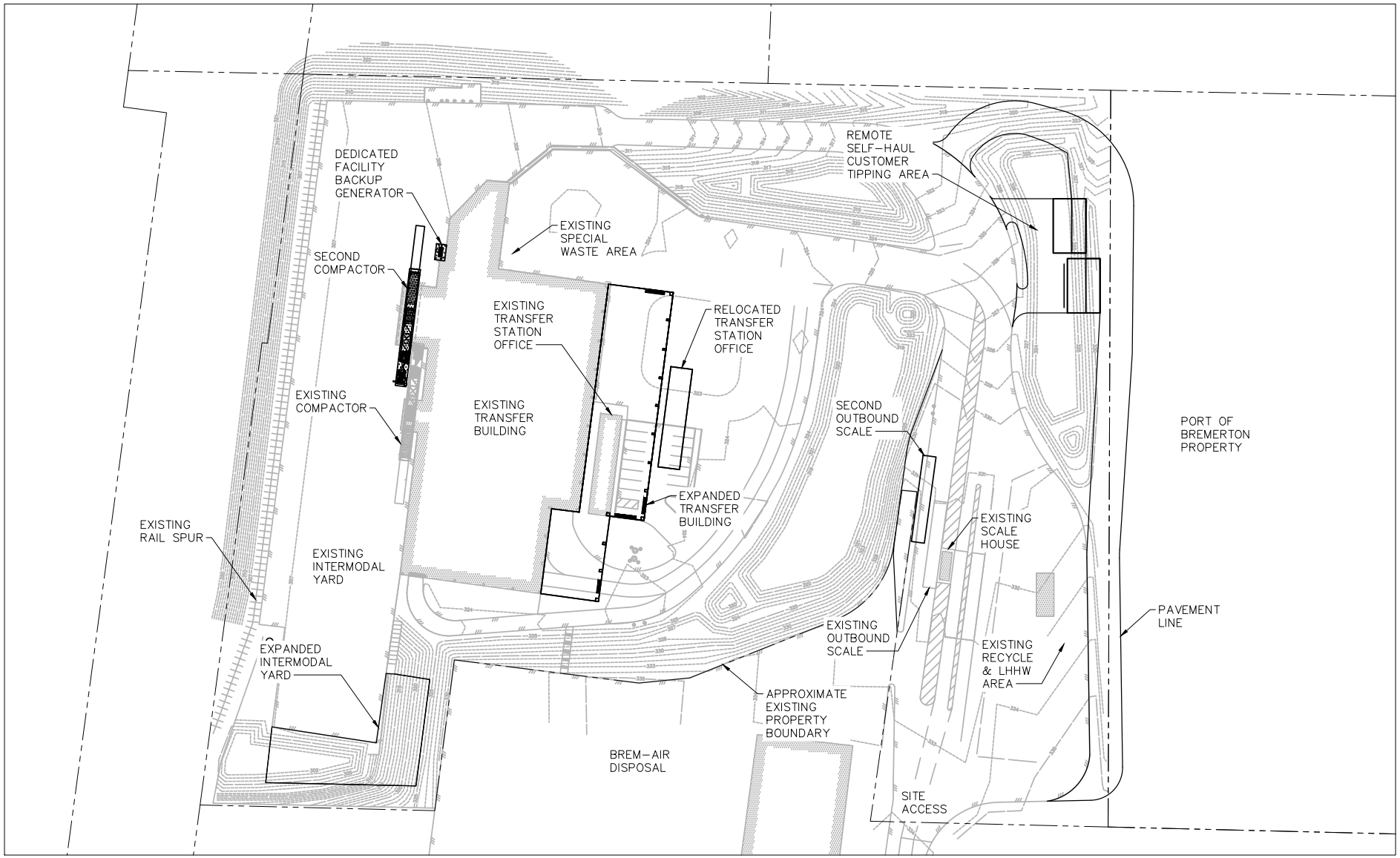

SCALE IN FEET
0 40 80

Parametrix
ENGINEERING . PLANNING . ENVIRONMENTAL SCIENCES

DESIGNED	ONE INCH AT FULL SCALE, IF NOT, SCALE ACCORDINGLY
DRAWN	FILE NAME
CHECKED	JOB No.
APPROVED	DATE

FIGURE 1: SITE LAYOUT - ALL POTENTIAL IMPROVEMENTS
OLYMPIC VIEW TRANSFER STATION
KITSAP COUNTY

FILE: XPS1578151-DE-SITE_FIGURES LAYOUT: FIG 1 SITE IMAGES:
DATE: Dec 30, 2020 - 11:48am PLOTTED BY: OdegaCoo XREFS: XPS1578151-BA | XPS1578151-EXSD

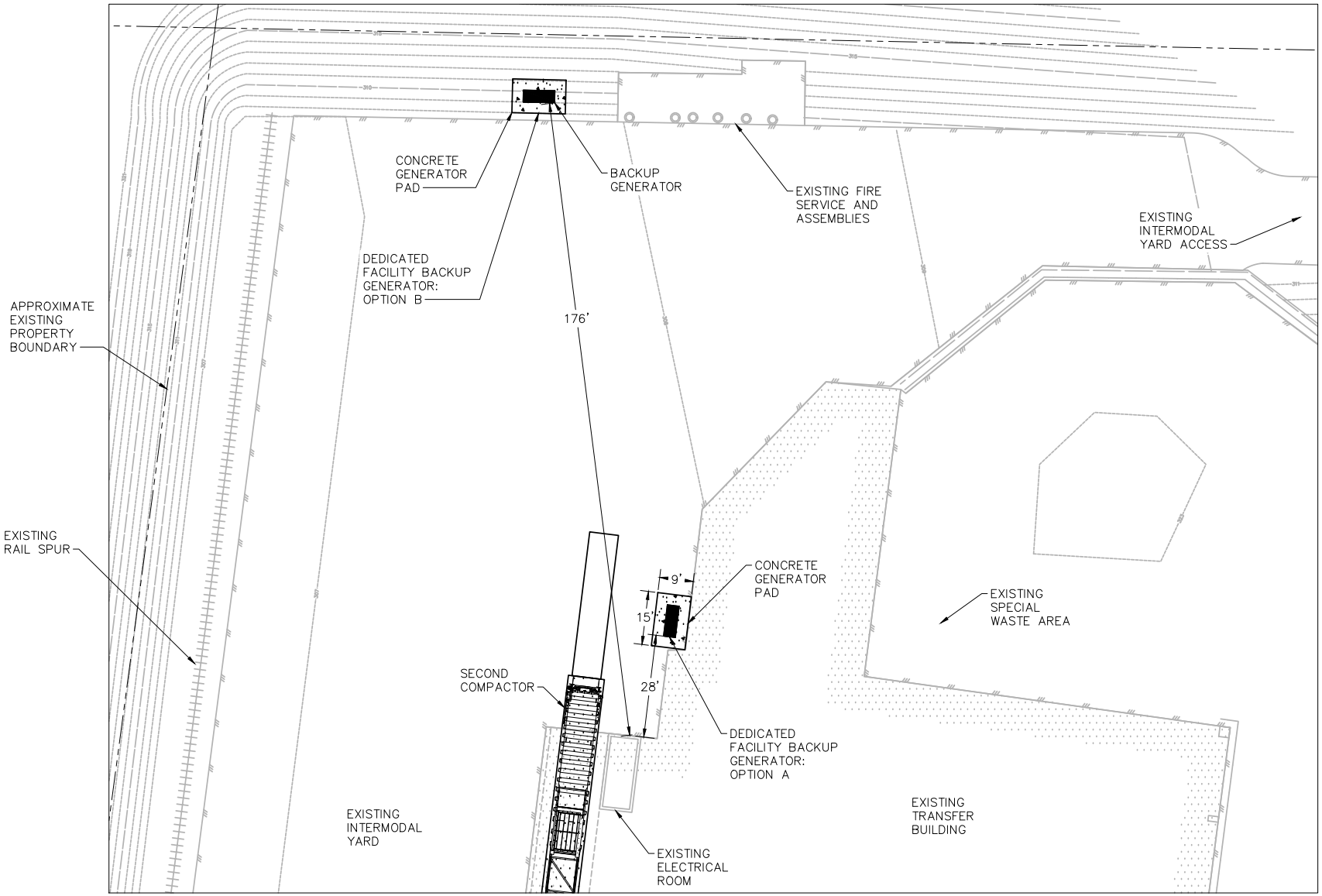

Parametrix
ENGINEERING . PLANNING . ENVIRONMENTAL SCIENCES

DESIGNED	ONE INCH AT FULL SCALE, IF NOT, SCALE ACCORDINGLY
DRAWN	FILE NAME
CHECKED	JOB No.
APPROVED	DATE

FIGURE 2: DEDICATED FACILITY BACKUP POWER LAYOUT
OLYMPIC VIEW TRANSFER STATION
KITSAP COUNTY

FILE: XPS1578151-DE-SITE_FIGURES LAYOUT: FIG 2 GEN IMAGES:
DATE: Dec 30, 2020 - 11:48am PLOTTED BY: OdegaCoo XREFS: XPS1578151-BA | XPS1578151-EXSD

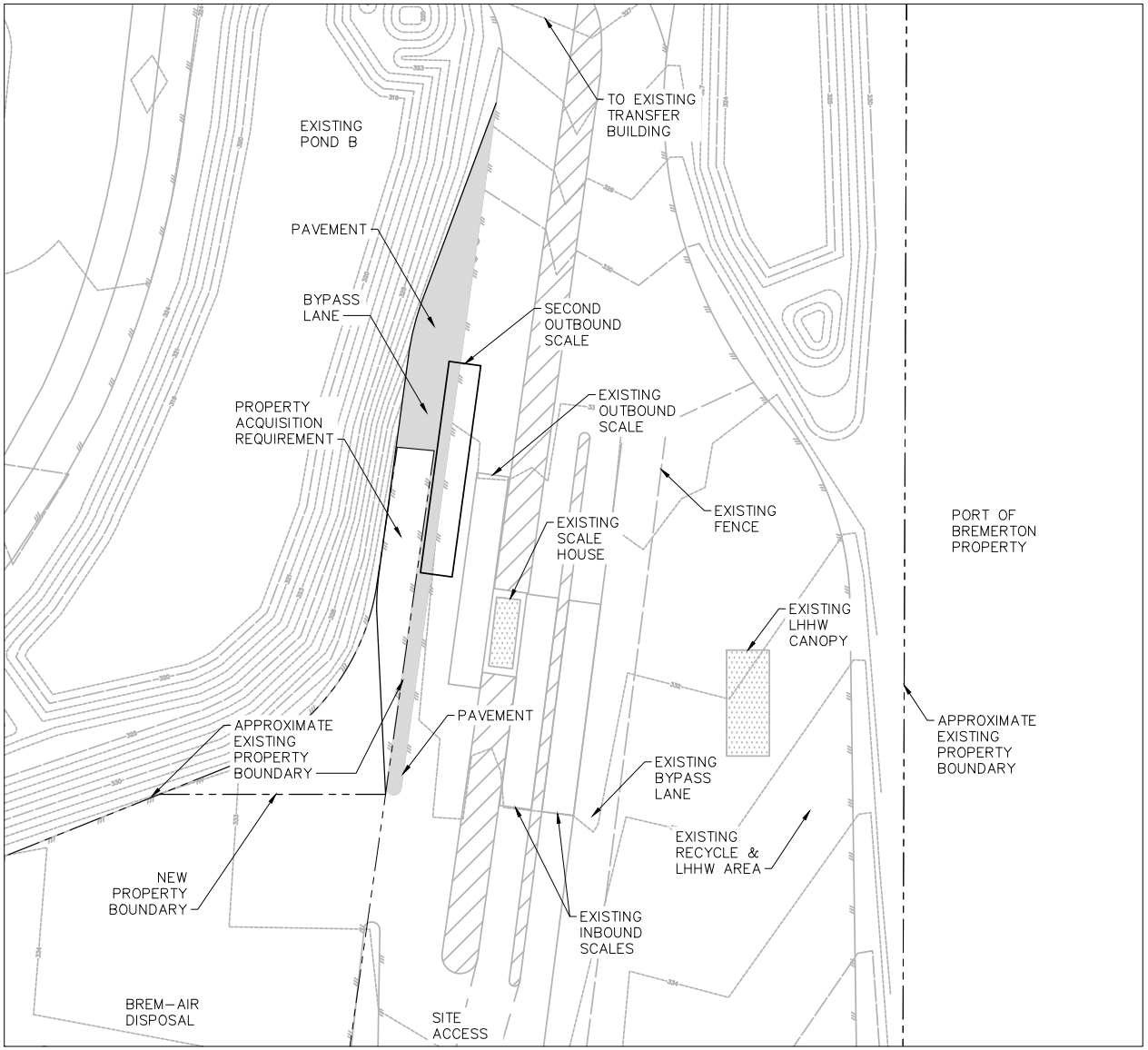

SCALE IN FEET
0 20 40

Parametrix
ENGINEERING . PLANNING . ENVIRONMENTAL SCIENCES

DESIGNED	ONE INCH AT FULL SCALE, IF NOT, SCALE ACCORDINGLY
DRAWN	FILE NAME
CHECKED	JOB No.
APPROVED	DATE

FIGURE 3: SECOND OUTBOUND SCALE LAYOUT
OLYMPIC VIEW TRANSFER STATION
KITSAP COUNTY

FILE: XPS1578151-DE-SITE_FIGURES LAYOUT: FIG 3 2ND SOMMERS
DATE: Dec 30, 2020 - 11:48am PLOTTED BY: OdegaCoo XREF'S: XPS1578151-BA | XPS1578151-EXSD

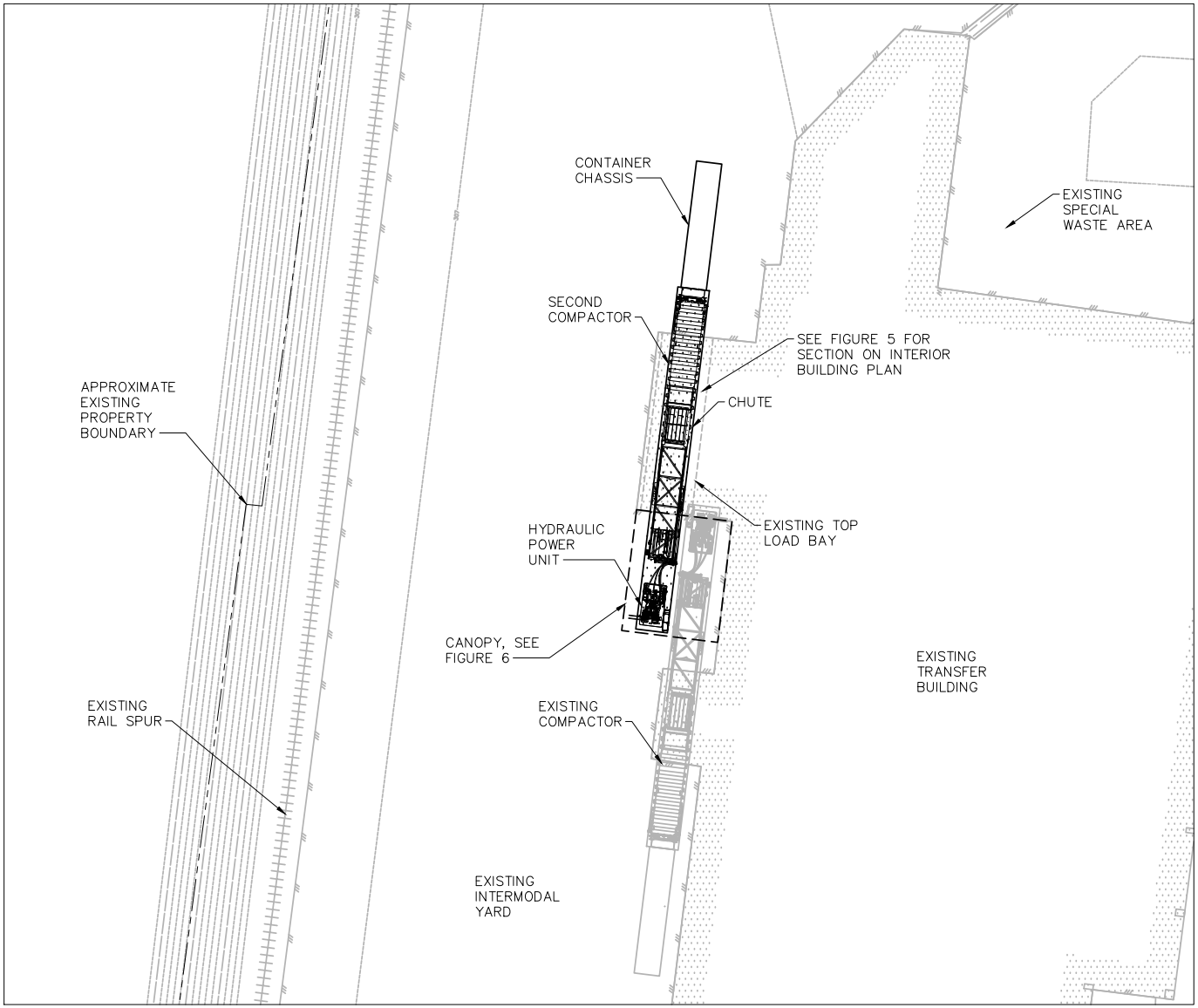

NOT TO SCALE

Parametrix
ENGINEERING . PLANNING . ENVIRONMENTAL SCIENCES

DESIGNED	ONE INCH AT FULL SCALE, IF NOT, SCALE ACCORDINGLY
DRAWN	FILE NAME
CHECKED	JOB No.
APPROVED	DATE

FIGURE 4: SECOND COMPACTOR LAYOUT
OLYMPIC VIEW TRANSFER STATION
KITSAP COUNTY

FILE: XPS1578151-DE-SITE_FIGURES LAYOUT: FIG 4 2ND COMPACTOR
DATE: Dec 30, 2020 - 11:48am PLOTTED BY: OdegaCoo XREFS: XPS1578151-BA | XPS1578151-EXSD

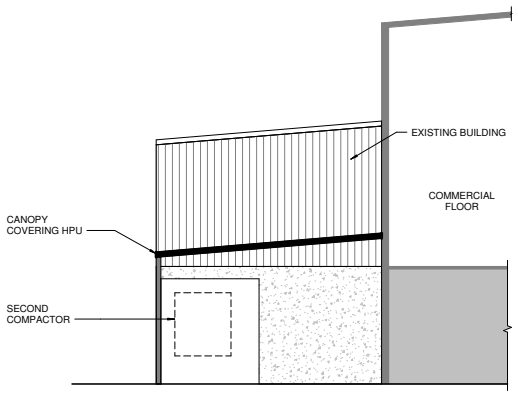

FIGURE 6 - CANOPY SECTION

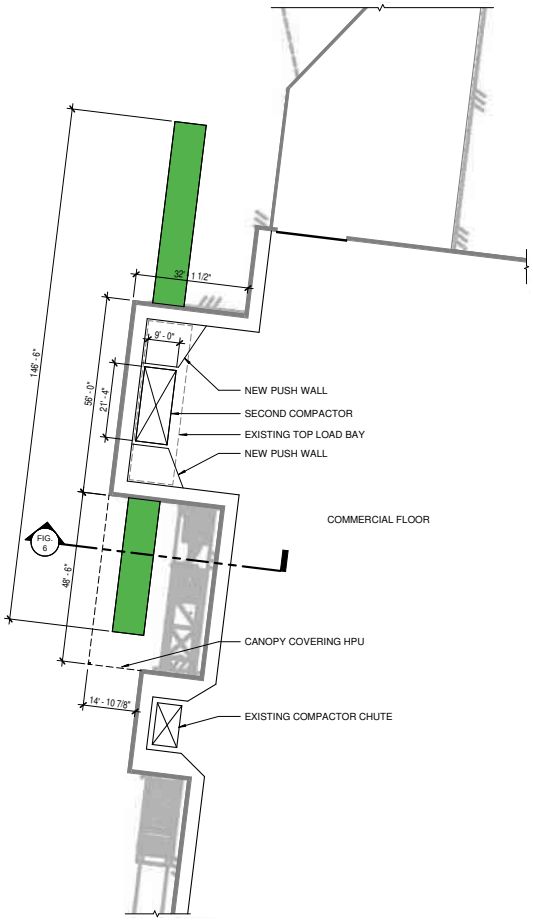

FIGURE 5 - CHUTE AND CANOPY PLAN

N

KPG SEATTLE

Parametrix
ENGINEERING . PLANNING . ENVIRONMENTAL SCIENCES

DESIGNED	ONE INCH AT FULL SCALE. IF NOT, SCALE ACCORDINGLY
DRAWN	FILE NAME
CHECKED	JOB No.
APPROVED	DATE

SECOND COMPACTOR

12/30/2020 9:54:22 AM C:\Users\erin\Documents\18043 KC CVTS centra\V19_erin.rvt

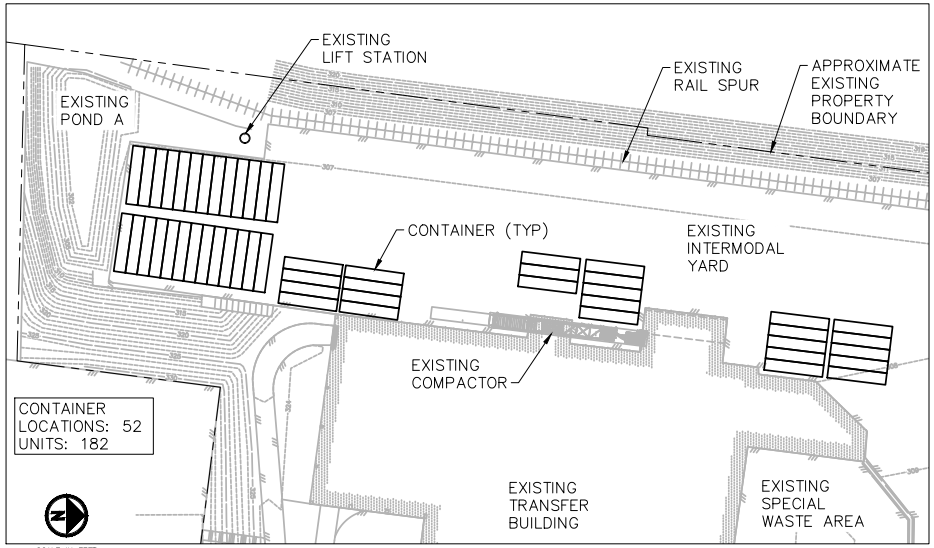

1. EXISTING INTERMODAL YARD

SCALE: 1"=40'

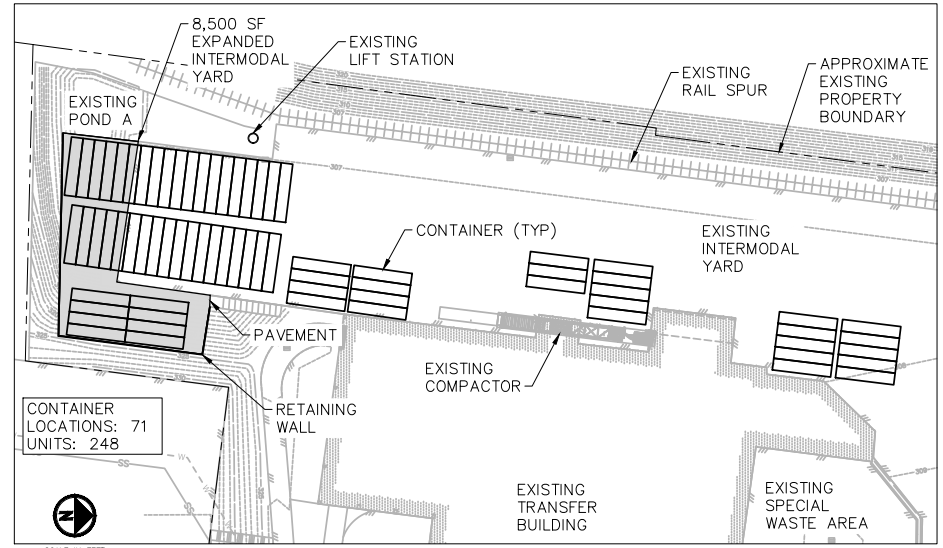

2. EXPANDED INTERMODAL YARD

SCALE: 1"=40'

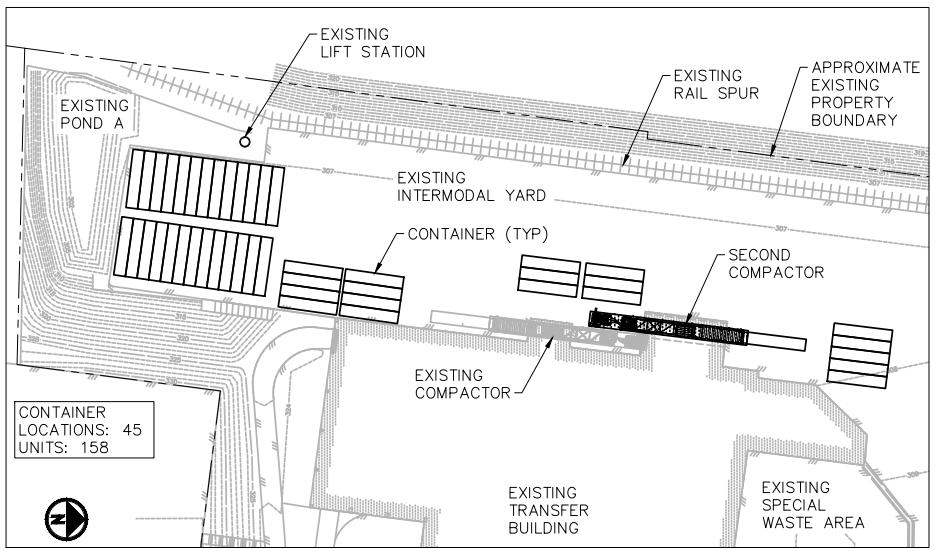

3. EXISTING INTERMODAL YARD WITH SECOND COMPACTOR

SCALE: 1"=40'

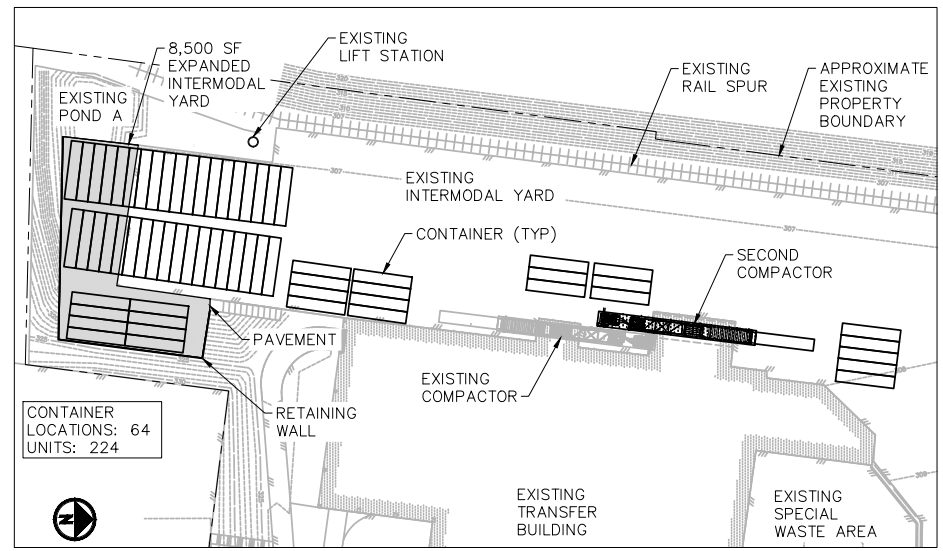

4. EXPANDED INTERMODAL YARD WITH SECOND COMPACTOR

SCALE: 1"=40'

Parametrix
ENGINEERING . PLANNING . ENVIRONMENTAL SCIENCES

DESIGNED	ONE INCH AT FULL SCALE, IF NOT, SCALE ACCORDINGLY
DRAWN	FILE NAME
CHECKED	JOB No.
APPROVED	DATE

FIGURE 7: EXPANDED INTERMODAL YARD LAYOUT
OLYMPIC VIEW TRANSFER STATION
KITSAP COUNTY

FILE: XPS1578151-DE-SITE_FIGURES LAYOUT: FIG 5 EXP YARDSIDES
DATE: Dec 30, 2020 - 11:46am PLOTTED BY: OdegaCoo XREFS: XPS1578151-BA | XPS1578151-EXSD

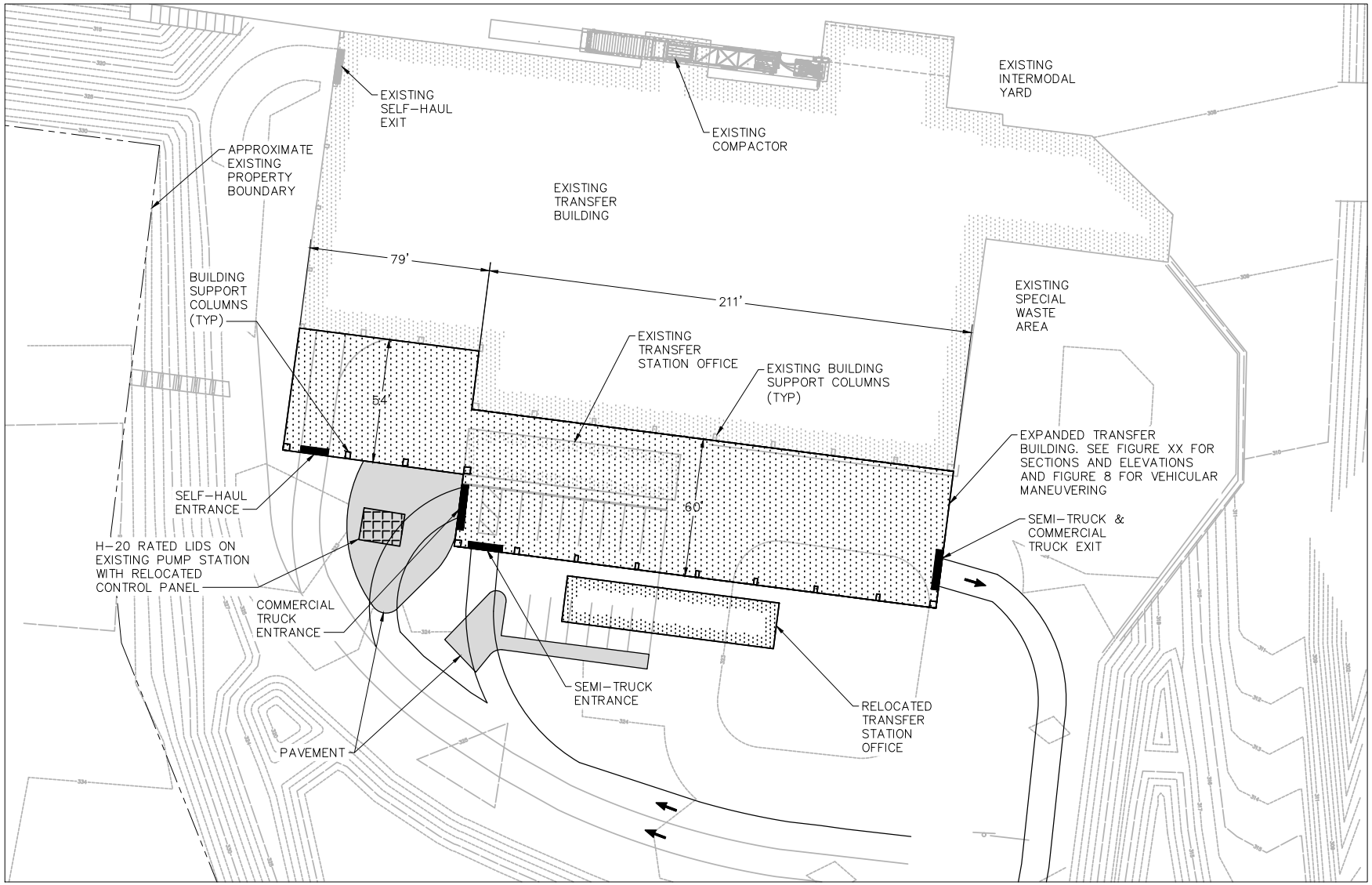

SCALE IN FEET
20 40

Parametrix
ENGINEERING . PLANNING . ENVIRONMENTAL SCIENCES

DESIGNED	ONE INCH AT FULL SCALE, IF NOT, SCALE ACCORDINGLY
DRAWN	FILE NAME
CHECKED	JOB No.
APPROVED	DATE

FIGURE 8: EXPANDED TRANSFER BUILDING
TIPPING AREA
OLYMPIC VIEW TRANSFER STATION
KITSAP COUNTY

FILE: XPS1578151-DE-SITE_FIGURES LAYOUT: FIG 6 EXP BUILDINGS
DATE: Dec 30, 2020 - 11:48am PLOTTED BY: OdegaCoa XREF'S: XPS1578151-BA | XPS1578151-EXSD

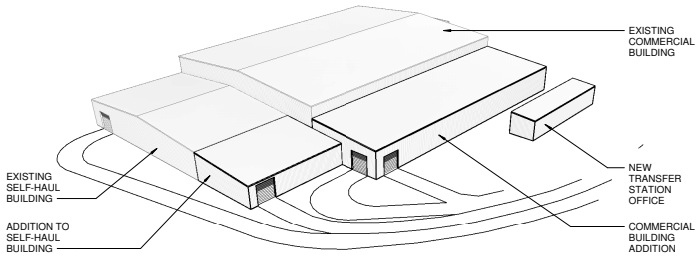

FIGURE 12 - EXPANDED BUILDING AND NEW OFFICE PERSPECTIVE

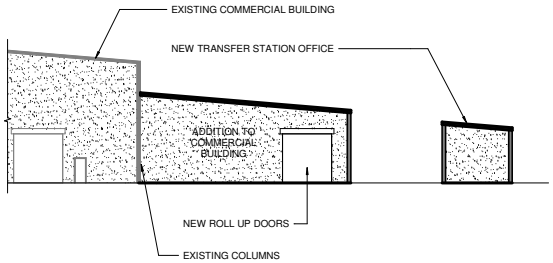

FIGURE 11 - SECTION THROUGH COMMERCIAL ADDITION

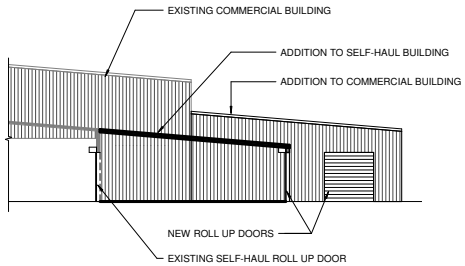

FIGURE 10 - SECTION THROUGH SELF-HAUL ADDITION

FIGURE 9 - EXPANDED BUILDING AND NEW OFFICE LOCATION

N

KPG SEATTLE | Tacoma Watershed Center | www.kpg.com

Parametrix
ENGINEERING . PLANNING . ENVIRONMENTAL SCIENCES

DESIGNED	ONE INCH AT FULL SCALE. IF NOT, SCALE ACCORDINGLY
DRAWN	FILE NAME
CHECKED	JOB No.
APPROVED	DATE

EXPANDED BUILDING AND NEW OFFICE LOCATION

12/3/2020 10:53:13 AM C:\Users\mfd\Documents\18043 KC OVTS central V19 - etts.rvt

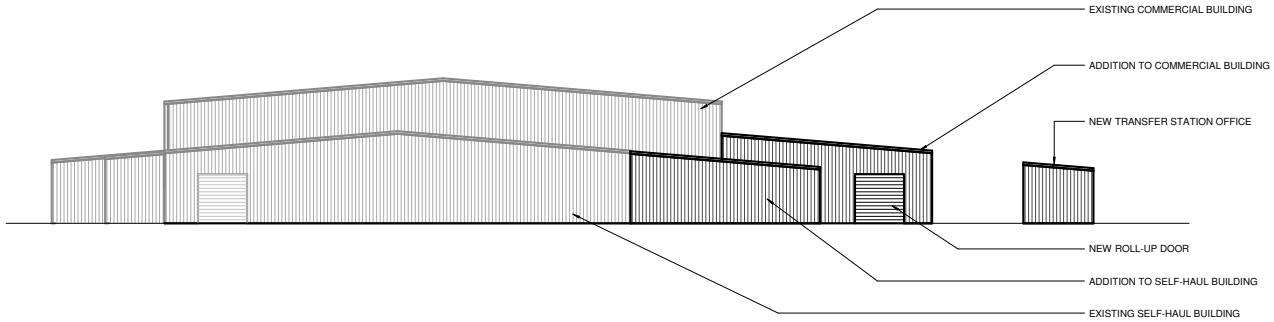

FIGURE 14 - EXPANDED BUILDING AND NEW OFFICE LOCATION

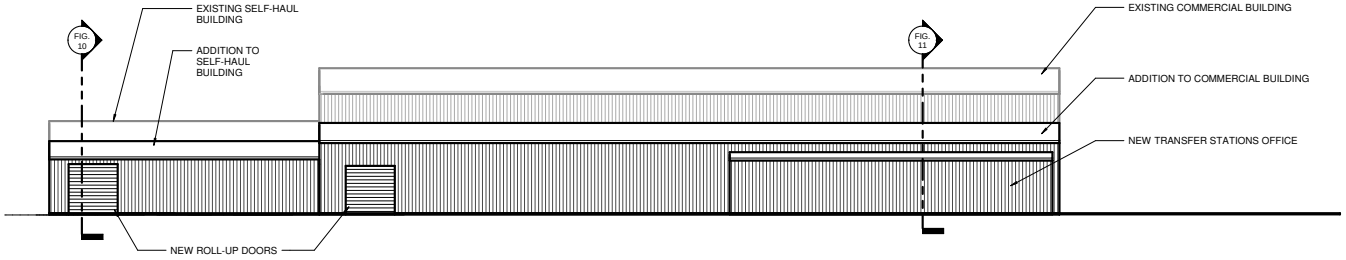

FIGURE 13 - EXPANDED BUILDING AND NEW OFFICE LOCATION

KPG SEATTLE | Tacoma Wenatchee | www.kpg.com

Parametrix
ENGINEERING . PLANNING . ENVIRONMENTAL SCIENCES

DESIGNED	ONE INCH AT FULL SCALE. IF NOT, SCALE ACCORDINGLY
DRAWN	FILE NAME
CHECKED	JOB No.
APPROVED	DATE

EXPANDED BUILDING AND NEW OFFICE LOCATION

12/3/2020 10:41:57 AM C:\Users\erin\Documents\18043 KC OVTS central V19_erin.rvt

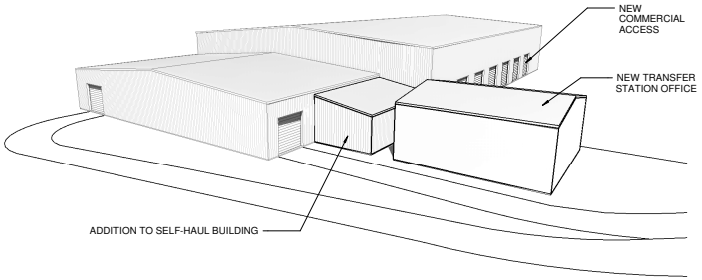

FIGURE 16 - EXPANDED SELF-HAUL AND NEW OFFICE PERSPECTIVE

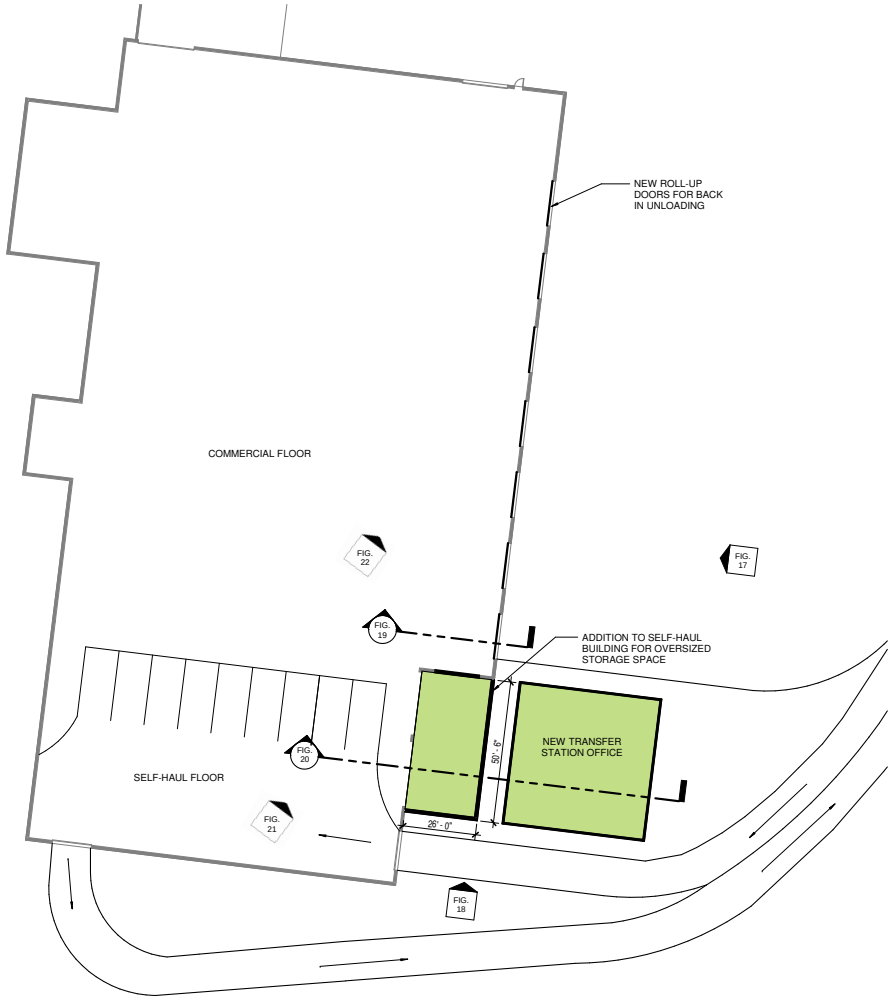

FIGURE 15 - EXPANDED SELF-HAUL AND NEW OFFICE

KPG SEATTLE

Parametrix
ENGINEERING . PLANNING . ENVIRONMENTAL SCIENCES

DESIGNED	ONE INCH AT FULL SCALE. IF NOT, SCALE ACCORDINGLY
DRAWN	FILE NAME
CHECKED	JOB No.
APPROVED	DATE

EXPANDED SELF-HAUL
AND NEW TRANSFER
STATION OFFICE

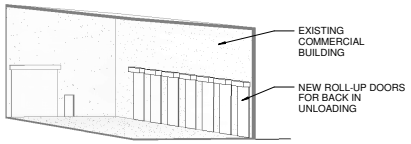

FIGURE 22 - SECTION THROUGH COMMERCIAL

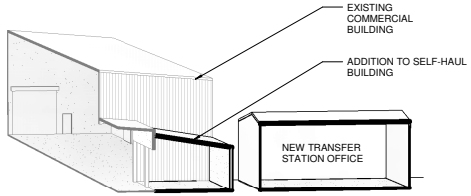

FIGURE 21 - SECTION THROUGH SELF-HAUL

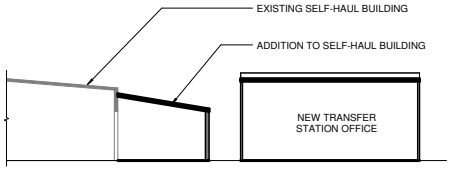

FIGURE 20 - SECTION THROUGH SELF-HAUL

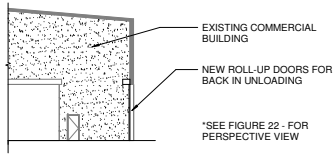

FIGURE 19 - SECTION THROUGH COMMERCIAL

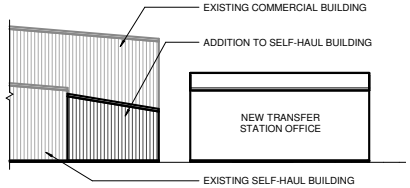

FIGURE 18 - SOUTH ELEVATION

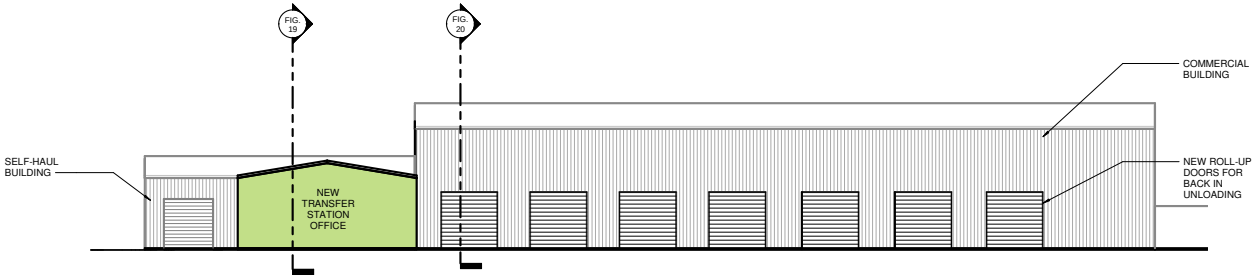

FIGURE 17 - EXPANDED SELF-HAUL & NEW OFFICE EAST ELEVATION

KPG SEATTLE

Parametrix
ENGINEERING . PLANNING . ENVIRONMENTAL SCIENCES

DESIGNED	ONE INCH AT FULL SCALE. IF NOT, SCALE ACCORDINGLY
DRAWN	FILE NAME
CHECKED	JOB No.
APPROVED	DATE

EXPANSION AT SELF-HAUL BUILDING AND NEW OFFICE

12/3/2020 10:02:52 AM C:\Users\erin\Documents\18043 KC OVTS central V19_erin.rvt

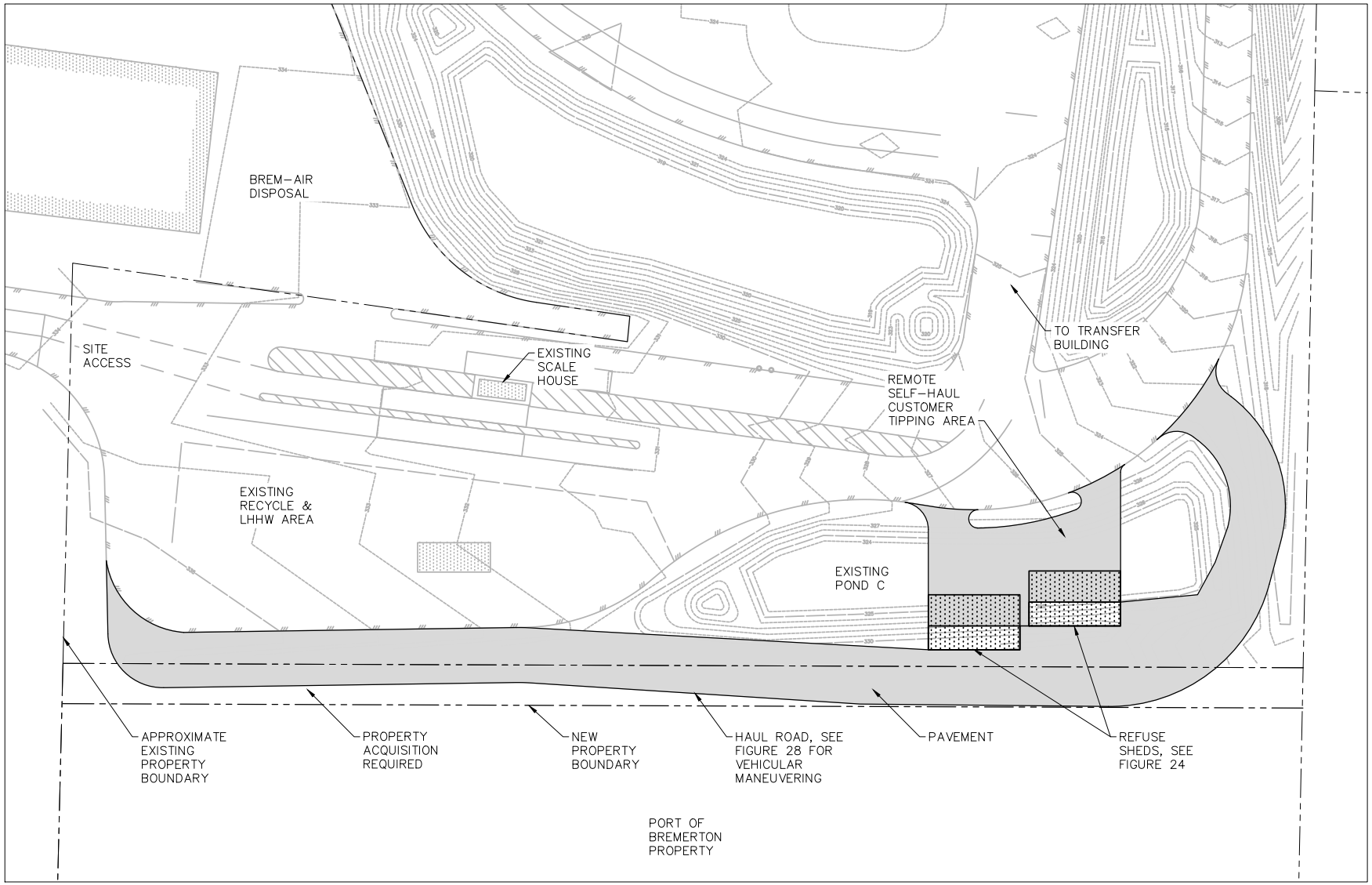

NOT TO SCALE

Parametrix
ENGINEERING . PLANNING . ENVIRONMENTAL SCIENCES

DESIGNED	ONE INCH AT FULL SCALE, IF NOT, SCALE ACCORDINGLY
DRAWN	FILE NAME
CHECKED	JOB No.
APPROVED	DATE

FIGURE 23: REMOTE SELF-HAUL CUSTOMER TIPPING AREA
OLYMPIC VIEW TRANSFER STATION
KITSAP COUNTY

FILE: XPS1578151-DE-SITE_FIGURES LAYOUT: FIG 7 SELF-WIMDES
DATE: Dec 30, 2020 - 11:49am PLOTTED BY: OdegaCoo XREF'S: XPS1578151-BA | XPS1578151-EXSD

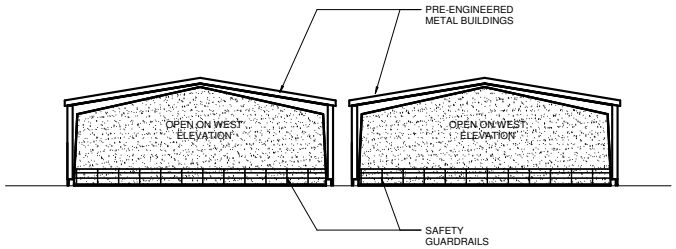

FIGURE 27 - REMOTE SELF HAUL WEST ELEVATION

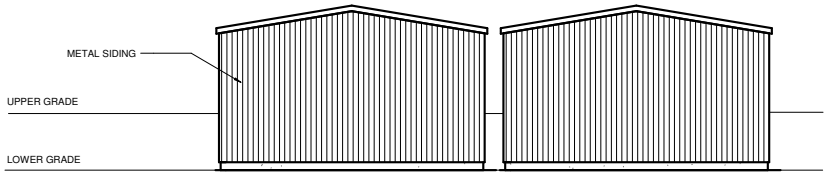

FIGURE 26 - REMOTE SELF-HAUL EAST ELEVATION

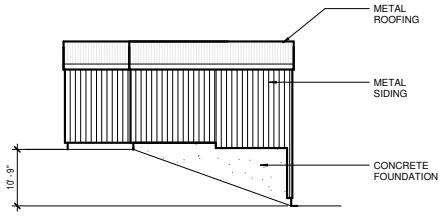

FIGURE 25 - REMOTE SELF-HAUL SOUTH ELEVATION

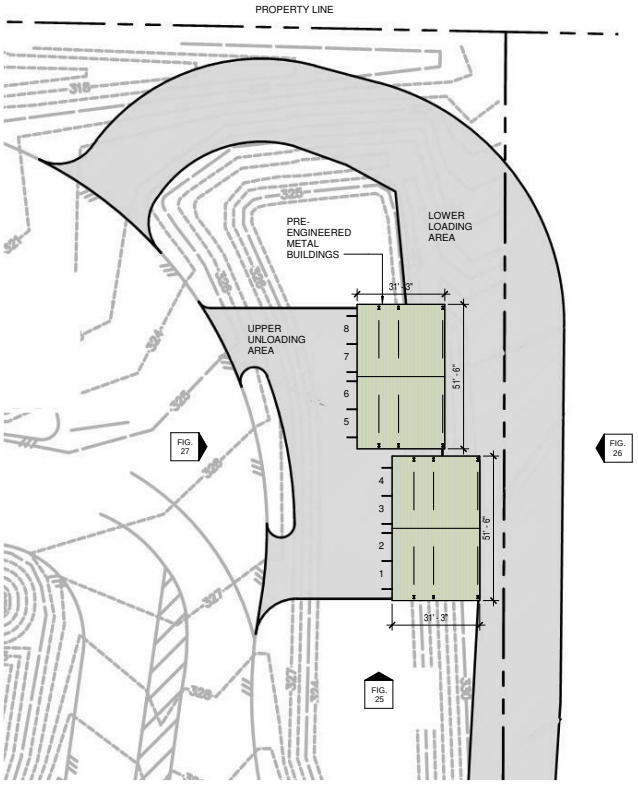

FIGURE 24 - REMOTE SELF-HAUL BUILDINGS

N

KPG SEATTLE

Parametrix
ENGINEERING . PLANNING . ENVIRONMENTAL SCIENCES

DESIGNED	ONE INCH AT FULL SCALE. IF NOT, SCALE ACCORDINGLY
DRAWN	FILE NAME
CHECKED	JOB No.
APPROVED	DATE

REMOTE SELF-HAUL
BUILDINGS

12/30/2020 11:01:40 AM C:\Users\erin\Documents\18043 KC CVTS central V19_erin.rvt

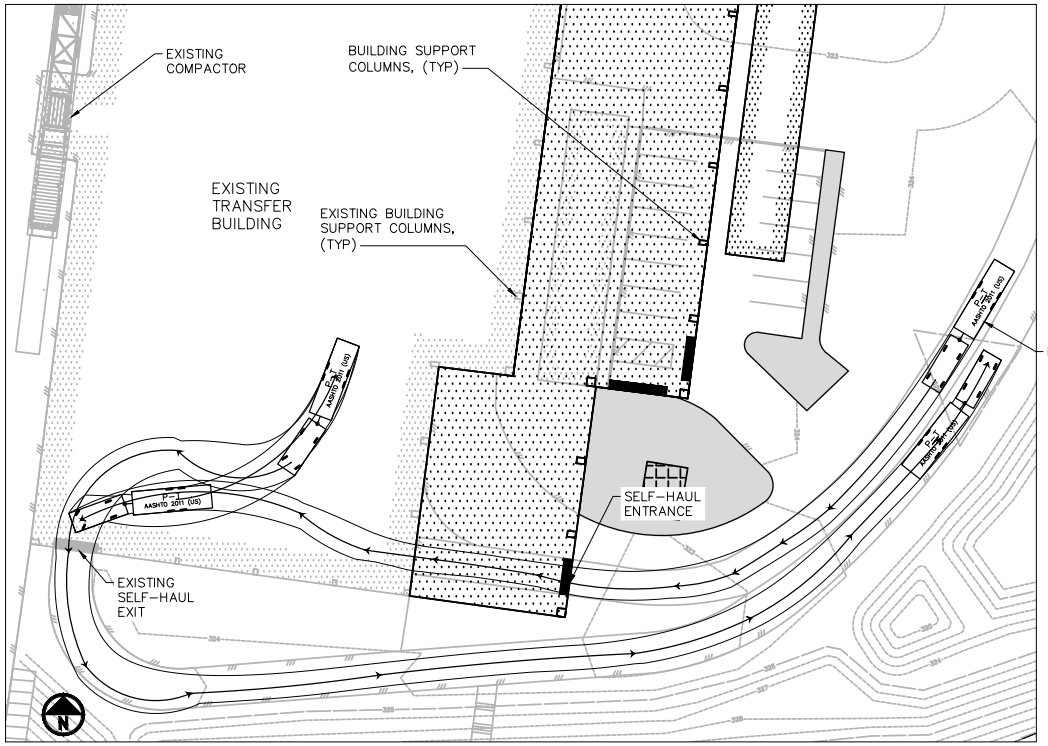

SELF-HAUL ENTRY AND EXIT

SCALE: 1"=20'

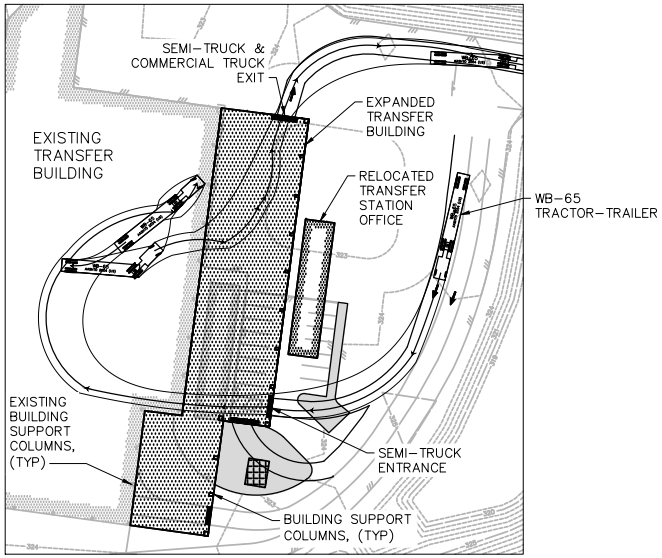

SEMI-TRUCK ENTRY AND EXIT

SCALE: 1"=40'

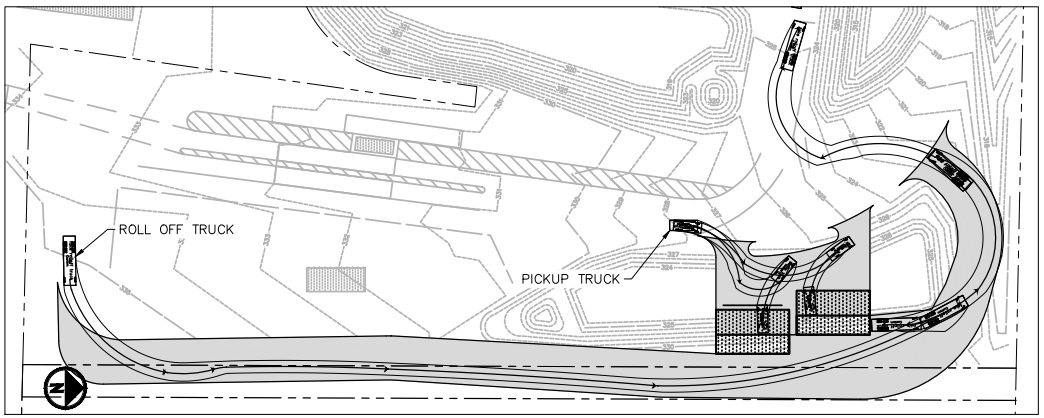

REMOTE SELF-HAUL TIPPING AREA ENTRY AND EXIT

SCALE: 1"=40'

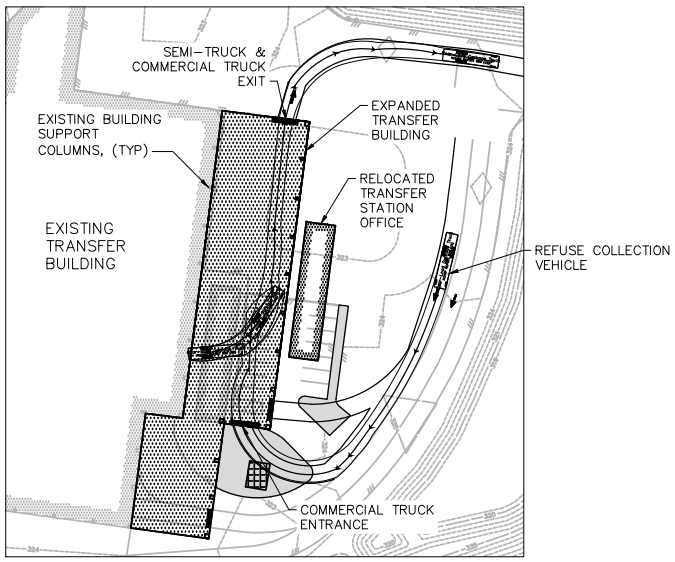

COMMERCIAL ENTRY AND EXIT

SCALE: 1"=40'

Parametrix
ENGINEERING . PLANNING . ENVIRONMENTAL SCIENCES

DESIGNED	ONE INCH AT FULL SCALE, IF NOT, SCALE ACCORDINGLY
DRAWN	FILE NAME
CHECKED	JOB No.
APPROVED	DATE

FIGURE 28: TURNING MOVEMENTS
OLYMPIC VIEW TRANSFER STATION
KITSAP COUNTY

FILE: XPS157851-DE-SITE_FIGURES LAYOUT: FIG 8 TURNING MOVEMENTS
DATE: Dec 30, 2020 - 11:10am PLOTTED BY: Dougpick PAGE SIZE: XPS157851-BA | XPS157851-EXSD

Attachment B

Alternatives Screening Matrix

DRAFT

ALTERNATIVES SCREENING MATRIX

No.	ALTERNATIVE IMPROVEMENT[1]	EVALUATION CRITERIA[5, 6]															
		Improved Operator & Customer Health & Safety	Improved Customer Convenience	Improved Operational Capacity	Improved Operational Reliability, Flexibility & Efficiency	Reduced Environmental Impacts	Increased Operational Cost	Reduced Operational Cost	Increased Maintenance Cost	Reduced Maintenance Costs	Impacts to Operation During Construction	Difficulty in Securing Permits	Capital Cost[2]	Impacts to Off Site Property and Surrounding Infrastructure	Urgency to Implement	Requirement for Coordination with Other Parties	Must Be Coordinated With Improvement No. ____
1	Add Second Compactor at the Existing Top Load Bay	Low	Low	High	High	NA	Low	NA	High	NA	High	Low	D	NA	High	Low	4B,9B,10B
2A	Expanded Transfer Building and Self-Haul Customer Tipping Area to the East	NA	High	High	High	NA	Low	NA	Low	NA	High	Med	B	NA	Med	Low	2B,2C,12,14B
2B	Add a Second Self-Haul Customer Tipping Area outside of the Transfer Building	NA	High	High	High	NA	High	NA	Med	NA	High[4]	Med	B	NA	Med	Low	2A,2C,4,5,7,8,9A,12,14B,15,16,17
2C	Expand the self-haul tipping stall quantity	NA	Med	Med	Med	NA	Low	NA	NA	NA	NA	NA	NA	NA	Med	NA	12
3A	Expanded Intermodal Container Yard over Pond A	NA	NA	Low	Low	NA	NA	NA	Low	NA	Low	Med	A	NA	Low	Low	3B,3C,4,6,8,9A,17
3B	Expanded Intermodal Container Yard over Pond A and to the east of Pond A	NA	NA	Med	Med	NA	NA	NA	Low	NA	Med	Med	B	Low	Low	Low	3A,3C,4,6,8,9A,17
3C	Expanded Intermodal Container Yard to the South through Property Acquisition	NA	NA	High	High	NA	NA	NA	Low	NA	Med	High	B[3]	Med	Low	Med	3A,3B,4,6,8,9A,17
4A	Separate C&D Tipping & Loadout Area in the current Special Waste Area w/ Expanded Canopy	Low	Low	Med	High	Med	Med	NA	Med	NA	High	Med	C	NA	Med	Low	1,2B,4B8,9A,10,11,12,14B,17
4B	Separate C&D Tipping & Loadout Area in at the top load bay in the transfer building	NA	NA	Low	Low	Med	Med	NA	Med	NA	Med	Low	A	NA	Low	Low	1,2B,4A,10,12,14B,17
5A	Second Outbound Scale and Exit Lane	NA	High	Med	High	Low	NA	NA	Low	NA	Med	Low	B	Low	Med	Med	4,5B,8,9A,12,16,17
5B	Second Outbound Scale and Exit Lane with Scale Facility Drainage Improvements	NA	High	Med	High	Low	NA	NA	Low	NA	Med	Low	B	Low	Med	Med	4,5A,8,9A,12,16,17
6A	Expanded Off-Site Rail Siding (4,250 ft)	NA	NA	High	High	NA	NA	Med	Low	NA	Low	High	C	Med	Med	High	3,4,6B,6C
6B	Expanded Off-Site Rail Siding (10,625 ft)	NA	NA	High	High	NA	NA	High	Low	NA	Low	High	D	Med	Med	High	3,4,6A,6C
6C	Expanded Off-Site Rail Siding (17,000 ft)	NA	NA	High	High	NA	NA	High	Low	NA	Low	High	D	Med	Med	High	3,4,6A,6B
7	Dedicated Facility Backup Power	Low	Low	Low	Med	NA	Low	NA	Low	NA	Low	Low	A	NA	High	NA	2A,2B,3,4,8,9,10B,11,14,15
8	Re-engineer Surface Water Management System	NA	NA	NA	NA	Med	NA	Low	Low	NA	Low	Med	B	Low	High	Low	2A,2B,3,4,5,10,14B

No.	ALTERNATIVE IMPROVEMENT[1]	Improved Operator & Customer Health & Safety	Improved Customer Convenience	Improved Operational Capacity	Improved Operational Reliability, Flexibility & Efficiency	Reduced Environmental Impacts	Increased Operational Cost	Reduced Operational Cost	Increased Maintenance Cost	Reduced Maintenance Costs	Impacts to Operation During Construction	Difficulty in Securing Permits	Capital Cost[1]	Impacts to Off Site Property and Surrounding Infrastructure	Urgency to Implement	Requirement for Coordination with Other Parties	Must Be Coordinated With Improvement No. ___
9A	Expanded Site Lighting System and Facility Hours	Low	Med	Low	Med	NA	NA	NA	Low	NA	Low	Low	A	Low	Low	NA	2B,3,4,5,6,7,14B,15,17
9B	Trailer coupling lighting	Low	NA	NA	Low	NA	NA	NA	NA	NA	Low	Low	A	NA	Low	NA	1,4,7
10A	Mitigation of Tipping Floor Trackout through increased maintenance	Low	NA	NA	NA	High	NA	NA	Med	NA	NA	NA	NA	NA	High	NA	1,4,7,8,10B,10C,11
10B	Mitigation of Tipping Floor Trackout through the addition of a wheel wash	Low	NA	NA	NA	High	NA	NA	Med	NA	High	Med	A	NA	High	Low	1,4,7,8,10A,10C,11,12
10C	Mitigation of Tipping Floor Trackout through drainage reconfiguration to wastewater	Low	NA	NA	NA	High	NA	NA	Low	NA	High	Med	A	Low	High	Med	1,4,7,8,10A,10B,11
11	Contact Water Pretreatment and Conveyance	NA	NA	NA	Low	Low	NA	Low	Low	NA	Med	Med	C	NA	Low	Low	7,8,10
12	Improved Site Signage	NA	Low	NA	NA	NA	NA	NA	NA	NA	Low	Low	A	NA	Low	NA	1,2,4,5,10B,13,14B,15
13	Pavement Improvements	NA	NA	NA	Low	NA	NA	NA	NA	Low	Med	NA	A	NA	Low	NA	1,3,8
14A	Renovation of the Existing Transfer Station Office Building	Low	NA	NA	Low	NA	Low	NA	Low	NA	Med	Low	A	NA	Low	Low	
14B	Replacement of the Existing Transfer Station Office Building	Low	NA	NA	Low	NA	Low	NA	Low	NA	High	Med	B	NA	Low	Low	2B,4,7,8,12,16,17
15	Add Styrofoam recycling	NA	Low	NA	NA	Low	Low	NA	Low	NA	Low	Low	A	NA	Low	Low	
16	Improved Site Landscaping	NA	NA	NA	NA	NA	NA	NA	Low	NA	Low	NA	A	NA	Low	NA	2B,14B
17	Expanded site surveillance cameras	Low	NA	NA	Low	NA	NA	Low	Low	NA	Low	NA	A	NA	Low	NA	2,3,4,5,9A,14B

[1] Highlighted improvements are in the Capital Facilities Plan in the draft OVTS Operator Procurement RFP.

[2] Capital Cost: A <$500,000; B $500,000 - $1 Million; C $1 Million - $2.5 Million; D $2.5 Million - $5 Million; E $5 Million - $8 Million; F > $8 Million

[3] Not including land acquisition cost.

[4] Construction impacts are high if facility is built within the existing site footprint. They would be low or NA if adjacent property is purchased for this facility.

[5] Green and red colors have been incorporated into the matrix to visually emphasize the evaluation results where appropriate, with green as a positive indicator and red as a negative indicator. The darker the color shade is an indication of a greater positive or negative result.

[6] NA = not applicable

Attachment C

OVTS Electrical and Generator Information

DRAFT

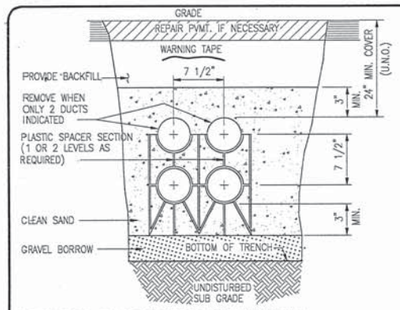

CARLON BASE AND INTERMEDIATE DUCT SPACERS (OR EQUIVALENT) SHALL BE PLACED 12" FROM EACH JOINT AND ON 5'-0" CENTERS THROUGHOUT DUCT RUN.

TIE CONDUITS TO SPACERS TO PREVENT HORIZONTAL MOVEMENT.

TYPICAL DUCT BANK SECTION
SCALE: NONE

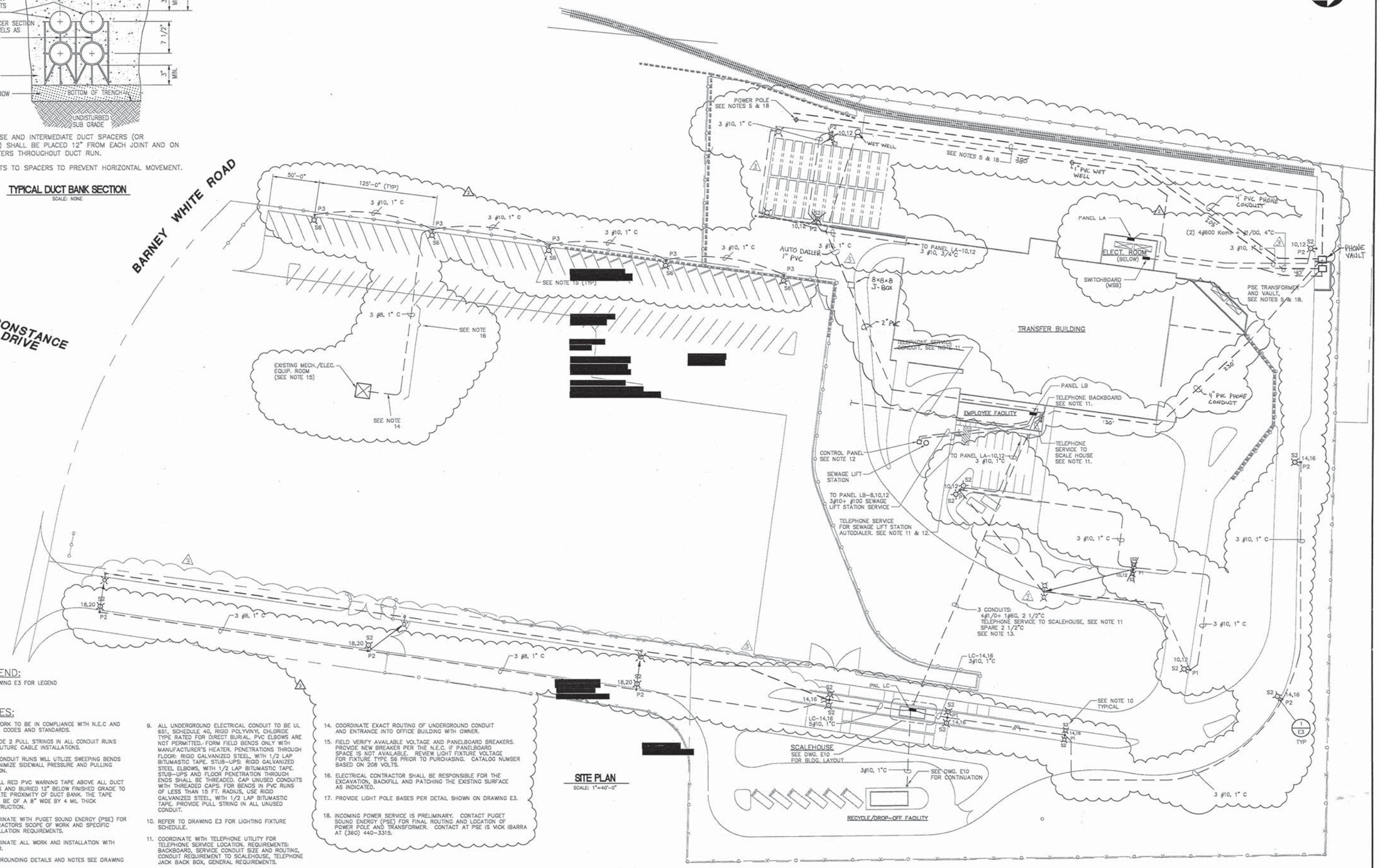

SITE PLAN
SCALE: 1"=40'-0"

LEGEND:

SEE DRAWING E3 FOR LEGEND

NOTES:

1. ALL WORK TO BE IN COMPLIANCE WITH N.E.C AND LOCAL CODES AND STANDARDS.
2. PROVIDE 2 PULL STRINGS IN ALL CONDUIT RUNS FOR FUTURE CABLE INSTALLATIONS.
3. ALL CONDUIT RUNS WILL UTILIZE SWEEPING BENDS TO MINIMIZE SIDEWALL PRESSURE AND PULLING TENSION.
4. INSTALL RED PVC WARNING TAPE ABOVE ALL DUCT BANKS AND BURIED 12" BELOW FINISHED GRADE TO INDICATE PROXIMITY OF DUCT BANK. THE TAPE SHALL BE OF A 8" WIDE BY 4 MIL THICK CONSTRUCTION.
5. COORDINATE WITH PUGET SOUND ENERGY (PSE) FOR CONTRACTORS SCOPE OF WORK AND SPECIFIC INSTALLATION REQUIREMENTS.
6. COORDINATE ALL WORK AND INSTALLATION WITH OWNER.
7. FOR GROUNDING DETAILS AND NOTES SEE DRAWING E4.
8. SELECT BACKFILL MATERIAL FOR TRENCHES AND DUCTBANKS SHALL BE COMPACTED TO 95% DENSITY, RELATIVE TO IMMEDIATELY SURROUNDING UNDISTURBED SOIL, PER ASTM D1557 AND ASTM D2049.
9. ALL UNDERGROUND ELECTRICAL CONDUIT TO BE UL 651, SCHEDULE 40, RIGID POLYVINYL CHLORIDE TYPE RATED FOR DIRECT BURIAL. PVC ELBOWS ARE NOT PERMITTED. FORM FIELD BENDS ONLY WITH MANUFACTURER'S HEATER. PENETRATIONS THROUGH FLOOR: RIGID GALVANIZED STEEL, WITH 1/2 LAP BITUMASTIC TAPE. STUB-UPS: RIGID GALVANIZED STEEL ELBOWS, WITH 1/2 LAP BITUMASTIC TAPE. STUB-UPS AND FLOOR PENETRATION THROUGH ENDS SHALL BE THREADED. CAP UNUSED CONDUITS WITH THREADED CAPS. FOR BENDS IN PVC RUNS OF LESS THAN 15 FT. RADIUS, USE RIGID GALVANIZED STEEL, WITH 1/2 LAP BITUMASTIC TAPE. PROVIDE PULL STRING IN ALL UNUSED CONDUIT.
10. REFER TO DRAWING E3 FOR LIGHTING FIXTURE SCHEDULE.
11. COORDINATE WITH TELEPHONE UTILITY FOR TELEPHONE SERVICE LOCATION. REQUIREMENTS: BACKBOARD, SERVICE CONDUIT SIZE AND ROUTING, CONDUIT REQUIREMENT TO SCALEHOUSE, TELEPHONE JACK BACK BOX, GENERAL REQUIREMENTS.
12. PROVIDE ALL WIRING REQUIRED FOR PROPER OPERATION OF THE SEWAGE LIFT STATION. COORDINATE WITH THE LIFT STATION PROVIDER FOR REQUIREMENTS.
13. ROUTE DUCT BANK BELOW RETENTION POND. MAINTAIN CODE MINIMUM CLEARANCES FROM TOP OF DUCT BANK TO GRADE. MINIMIZE THE QUANTITY AND SIZE OF THE BENDS IN THIS ROUTE. THE CONDUITS SHALL REMAIN UNSEALED ON BOTH ENDS, TO ALLOW AIR FLOW.
14. COORDINATE EXACT ROUTING OF UNDERGROUND CONDUIT AND ENTRANCE INTO OFFICE BUILDING WITH OWNER.
15. FIELD VERIFY AVAILABLE VOLTAGE AND PANELBOARD BREAKERS. PROVIDE NEW BREAKER PER THE N.E.C. IF PANELBOARD SPACE IS NOT AVAILABLE. REVIEW LIGHT FIXTURE VOLTAGE FOR FIXTURE TYPE S6 PRIOR TO PURCHASING. CATALOG NUMBER BASED ON 208 VOLTS.
16. ELECTRICAL CONTRACTOR SHALL BE RESPONSIBLE FOR THE EXCAVATION, BACKFILL AND PATCHING THE EXISTING SURFACE AS INDICATED.
17. PROVIDE LIGHT POLE BASES PER DETAIL SHOWN ON DRAWING E3.
18. INCOMING POWER SERVICE IS PRELIMINARY. CONTACT PUGET SOUND ENERGY (PSE) FOR FINAL ROUTING AND LOCATION OF POWER POLE AND TRANSFORMER. CONTACT AT PSE IS VICK IBARRA AT (360) 440-3315.

ISSUED FOR CONSTRUCTION

Harris Group Inc.

APPROVED	DATE	PROJECT
/	6/06/01	10821
DRAWN: NLO	CHECKED: MBB	ENGINEER: PYT / CHECKED: SDB

REV	DATE	DESCRIPTION	DWN BY	DES BY	CHK BY	APP BY
3	6/25/02	INCORPORATED AS-BUILT	AST		TLT	
2	8/06/01	ADDED SITE LIGHTING	KLC	RMS	RMS	
1	6/06/01	ADDED OFFICE BLDG AND MOVED LIFT STATION	WJB	SDB	LJC	
0	5/25/01	ISSUED FOR CONSTRUCTION	NLO	PYT	SDB	

DATE OF ISSUE ____ DWN BY ____ DES BY ____ CHK BY ____ APP BY ____

ET ENVIRONMENTAL CORPORATION

WASTE MANAGEMENT

RECORD DRAWING

OLYMPIC VIEW TRANSFER STATION
ELECTRICAL SITE PLAN

DRAWING NO. E1
PROJECT NO. 802763

SW-0043

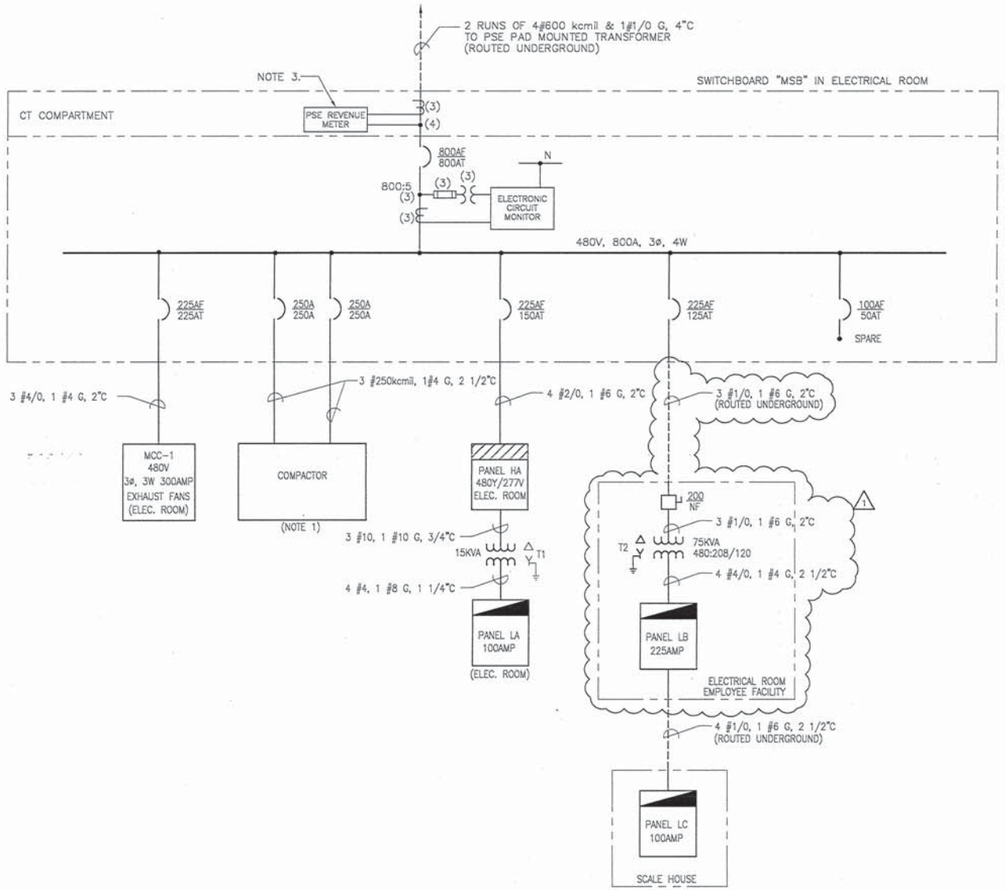

SINGLE LINE DIAGRAM
NOT TO SCALE

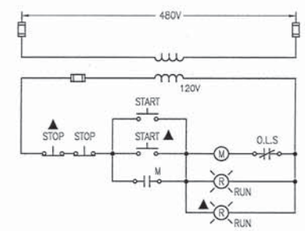

▲ – INDICATES DEVICE LOCATED IN EXHAUST FAN CONTROL PANEL. DEVICES SHALL BE ALLEN-BRADLEY 800T SERIES OR EQUAL

TYPICAL EXHAUST FAN (REF) CONTROL SCHEMATIC

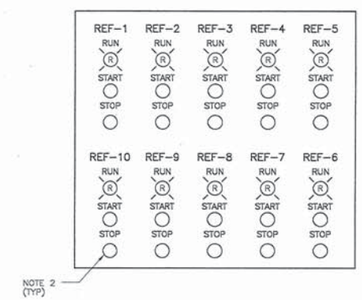

EXHAUST FAN CONTROL PANEL CONFIGURATION

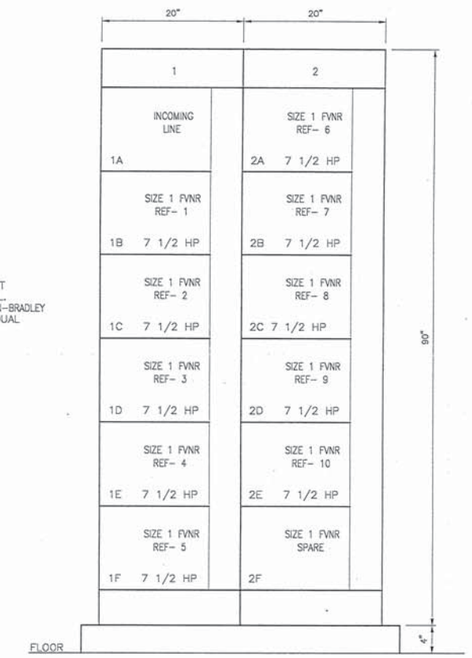

MCC-1
FRONT VIEW
NOT TO SCALE

NOTES:

1. COMPACTOR MOTOR STARTER PANEL FURNISHED WITH TWO (2) CIRCUIT BREAKERS. COMPACTOR HYDRAULIC PUMPS (2-125 HP) ARE FURNISHED WITH WYE-DELTA REDUCED VOLTAGE STARTERS.
2. COORDINATE WITH OWNER PRIOR TO DEVICE PURCHASE TO DETERMINE IF KEY OPERATION IS REQUIRED.
3. SWITCHBOARD SHALL INCLUDE A CT COMPARTMENT CONSTRUCTED TO EUSERC SPECIFICATIONS. A 13-TERMINAL METER SOCKET SHALL BE PROVIDED WITHIN THE SWITCHBOARD OR REMOTELY MOUNTED, AS DIRECTED BY THE OWNER AND PUGET SOUND ENERGY (PSE). COORDINATE WITH PSE FOR SPECIFIC REQUIREMENTS. CONTACT PSE, ROBERT BROWN, AT (360) 475-7027 FOR METERING REQUIREMENTS.

ISSUED FOR CONSTRUCTION

RECORD DRAWING

Harris Group Inc.

APPROVED:	DATE: 6/06/01	PROJECT: 10821
DRAWN: NLO	CHECKED:	ENGINEER: PYT / CHECKED: SDB

REV	DATE	DESCRIPTION	DWN BY	DES BY	CHK BY	APP BY
1	6/06/01	ADDED OFFICE BLDG	WJB	SDB	LJC	
0	5/25/01	ISSUED FOR CONSTRUCTION	NLO	PWT	SDB	

DATE OF ISSUE ____ DWN BY ____ DES BY ____ CHK BY ____ APP BY ____

ET ENVIRONMENTAL CORPORATION

WASTE MANAGEMENT

OLYMPIC VIEW TRANSFER STATION
ELECTRICAL
SINGLE LINE DIAGRAM

DRAWING NO. E2

PROJECT NO. 802763

SW-0043

DIRECTORY	KVA LOAD L1	KVA LOAD L2	KVA LOAD L3	CKT. NO.	BKR AMPS	BKR AMPS	CKT. NO.	KVA LOAD L1	KVA LOAD L2	KVA LOAD L3	DIRECTORY
~~SPARE~~ AIR COMPRESSOR				1	20	20	2	3.7			LIGHTING, TRANSFER BLDG.
				3		20	4		3.7		LIGHTING, TRANSFER BLDG.
				5		20	6			3.7	LIGHTING, TRANSFER BLDG.
SPARE				7	20	20	8	3.7			LIGHTING, TRANSFER BLDG.
				9		20	10		3.7		LIGHTING, TRANSFER BLDG.
				11		20	12			3.7	LIGHTING, TRANSFER BLDG.
SPARE ~~SUMP PUMP SP-1~~	4.2			13	20	20	14	3.7			LIGHTING, TRANSFER BLDG.
		4.2		15		20	16		3.3		LIGHTING, TRANSFER BLDG.
			4.2	17		20	18			0.5	LIGHTING-TRUCK DRIVE THRU
~~PANEL LA VIA TRANSFORMER T1~~ SUMP PUMP SP-1	5.0			19	30	20	20	3.6			LIGHTING-EXT. FLOOD LTG.
		5.0		21		20	22		0.4		LIGHTING-EXTERIOR (DOORS)
			5.0	23		20	24			0.5	LIGHTING-TRUCK DRIVE THRU
SPARE				25	20	30	26	4.0			MOTORIZED DOORS (3 @ 3HP)
				27			28		4.0		
				29			30			4.0	
SPARE				31	20	100 ~~20~~	32	1.3			PANEL LA VIA TRANSFORMER T-1 ~~MOTORIZED DOORS (2 @ 3/4HP)~~
SPARE				33	20		34		1.3		
~~SPARE~~ TRANS BLDG LTG				35	20		36			1.3	
TRANSFER BLDG LIGHTING	1.4			37	20	20	38	1.2			~~HEAT TRACE~~ * MOTORIZED
TRANSFER BLDG LIGHTING		1.86		39	20	20	40		1.2		~~HEAT TRACE~~ * DOORS
TRANSFER BLDG LIGHTING			2.3	41	20	20	42			1.2	~~HEAT TRACE~~ * 2@ 3/4HP
SUB-TOTAL	10.6	11.1	11.5			N		21.2	17.6	14.9	SUB-TOTAL

VOLTAGE: 480Y/277V 3PH. 4W. SN	MAIN BUS: 225A	TOTAL KVA L1 31.8	PANEL NO. HA
MAIN BREAKER: —	150A. TRIP	TOTAL KVA L2 28.7	
MOUNTING: SURFACE,	AIC RATING: 22,000	TOTAL KVA L3 26.4	LOC. ELECTRICAL ROOM
BUILDING: TRANSFER STATION		TOTAL KVA 86.9	

* PROVIDE GROUND FAULT BREAKER GFEPD

DIRECTORY	KVA LOAD L1	KVA LOAD L2	KVA LOAD L3	CKT. NO.	BKR AMPS	BKR AMPS	CKT. NO.	KVA LOAD L1	KVA LOAD L2	KVA LOAD L3	DIRECTORY
HP-1	0.7			1	15	100	2	6.12			PANEL "LC"
		0.7		3			4		6.82		
CU-1			2.0	5	40		6			4.05	
	2.0			7		20 ~~20~~	8	0.63			SEWAGE LIFT STATION
RECEPTACLE- TELE		0.2		9	20		10		0.63		
LIGHTING-OFFICE BLDG. EXT.			0.24	11	20		12			0.63	
HWH-1	2.7			13	30	20	14	0.2			RECEPTACLE- VENDING
		2.7		15		20	16		0.2		RECEPTACLE- VENDING
			2.7	17		20	18			0.2	RECEPTACLE- BREAK RM.
EF-1	0.7			19	20	20	20	0.6			RECEPTACLE- BREAK RM.
CP-1		0.3		21	20	20	22		1.2		LIGHTING
BH-1			1.25	23	20	20	24			0.56	LIGHTING
BH-2	1.25			25	20	20	26	0.2			RECEPTACLES
BH-3		1.25		27	20	20	28		1.0		RECEPTACLES
BH-4			1.25	29	20	20	30			0.6	RECEPTACLES
BH-5	1.25			31	20	20	32	0.6			RECEPTACLES
BH-10		0.75		33	20	20	34		0.4		RECEPTACLES
BH-11			0.75	35	20	20	36			0.4	RECEPTACLES
WH-1	1.1			37	20	20	38	0.4			RECEPTACLES
RECEPTACLES		1.0		39	20	20	40		0.4		RECEPTACLES
~~SPARE~~ FIRE ALARM				41	20	20	42			0.4	RECEPTACLES
SUB-TOTAL	9.7	6.9	8.19			N		8.75	10.65	6.84	SUB-TOTAL

VOLTAGE: 208Y/120V 3PH. 4W. SN	MAIN BUS: 225A	TOTAL KVA L1 18.45	PANEL NO. LB
MAIN BREAKER:	225A. TRIP	TOTAL KVA L2 17.55	
MOUNTING:	AIC RATING: 10,000	TOTAL KVA L3 15.03	LOC. ELECTRICAL CLOSET
BUILDING: EMPLOYEE BUILDING		TOTAL KVA 51.03	

DIRECTORY	KVA LOAD L1	KVA LOAD L2	KVA LOAD L3	CKT. NO.	BKR AMPS	BKR AMPS	CKT. NO.	KVA LOAD L1	KVA LOAD L2	KVA LOAD L3	DIRECTORY
LTG.-ELECT. & MECH. ROOM	0.62			1	20	20	2				~~AIR COMPRESSOR~~ SPARE
RCPTS.-ELECT. & MECH. RM.		1.0		3	20	20	4				~~FIRE ALARM PANEL~~ SPARE
RCPTS.-TRANSFER BUILDING			0.4	5	20	20	6			1.0	CUH-2
RCPTS.-TRANSFER BUILDING	0.4			7	20	20	8	0.5			CUH-1
RCPTS.-TRANSFER BUILDING		0.2		9	20	20	10		2.44		LIGHTING OUTDOOR POLES
SPARE				11	20		12			2.44	
SPARE				13	20	20	14				~~SPARE~~ PUSH WALL LTG
~~SPACE~~ WET WELL				15	1		16				SPACE
~~SPACE~~ WET WELL				17	50		18				SPACE
~~SPACE~~ WET WELL				19	1		20				~~SPACE~~ EYE WASH
SPACE				21			22				~~SPACE~~ HEAT TRACE
SPACE				23			24				~~SPACE~~ HEAT TRACE
SPACE				25			26				~~SPACE~~ HEAT TRACE
SPACE				27			28				~~SPACE~~ HEAT TRACE
SPACE				29			30				~~SPACE~~ HEAT TRACE
SUB-TOTAL	1.02	1.2	0.4			N		0.5	2.44	3.44	SUB-TOTAL

VOLTAGE: 208Y/120V 3PH. 4W. SN	MAIN BUS: 100A	TOTAL KVA L1 1.52	PANEL NO. LA
MAIN BREAKER:	100A ~~60A~~ TRIP	TOTAL KVA L2 3.64	
MOUNTING: SURFACE,	AIC RATING: 10,000	TOTAL KVA L3 3.84	LOC. ELECTRICAL ROOM
BUILDING: TRANSFER STATION		TOTAL KVA 9.0	

DIRECTORY	KVA LOAD L1	KVA LOAD L2	KVA LOAD L3	CKT. NO.	BKR AMPS	BKR AMPS	CKT. NO.	KVA LOAD L1	KVA LOAD L2	KVA LOAD L3	DIRECTORY
~~BH-6~~ SPARE	~~1.25~~			1	20	20	2	.4			RECEPTACLES
BH-7		1.25		3	20	20	4		.4		RECEPTACLES
~~BH-8~~ SPARE			~~1.25~~	5	20	20	6			.4	RECEPTACLES
BH-9	1.25			7	20	20	8	.5			LIGHTS @ RECYC. DROP-OFF
EF-2		0.7		9	20	20	10		.5		LIGHTING
WH-2			.75	11	20	20	12			.4	WEIGH SCALE RECEPT.
HWH-2	.75			13	20	20	14	2.44			STREET LIGHTING NORTH END
		.75		15			16		2.44		
SPARE				17	20	20	18			0.92	STREET LIGHTING SOUTH END
HP-2	1.1			19	15		20	0.92			
		1.1		21		20	22				~~SPARE~~ OUTSIDE SCALES
SPARE			—	23	20	20	24				SPARE
SPARE				25	20	20	26				SPARE
CU-2		1.25		27	20	20	28				SPARE
			1.25	29		20	30				SPARE
SUB-TOTAL	4.35	5.05	3.25			N		4.26	3.34	1.72	SUB-TOTAL

VOLTAGE: 208Y/120V 3PH. 4W. SN	MAIN BUS: 100A	TOTAL KVA L1 8.61	PANEL NO. LC
MAIN BREAKER:	100A. TRIP	TOTAL KVA L2 8.39	
MOUNTING: FLUSH	AIC RATING: 10,000	TOTAL KVA L3 4.97	LOC. SCALE HOUSE
BUILDING: SCALE HOUSE		TOTAL KVA 21.97	

ISSUED FOR CONSTRUCTION

Harris Group Inc.

APPROVED	DATE	PROJECT
/	6/06/01	10821
DRAWN: JMV	CHECKED: WBB	ENGINEER: P. TSOU / CHECKED: SDB

REV	DATE	DESCRIPTION	DWN BY	DES BY	CHK BY	APP BY
3	6/25/02	INCORPORATED AS-BUILT	RSS		RLT	
2	8/06/01	REVISED PANELS & ADDED BREAKERS IN LA & LC.	KLC	RMS	RMS	
1	6/06/01	REVISED PANELS & ADDED OFFICE PANEL LB	WJB	SDB	LJC	
0	5/25/01	ISSUED FOR CONSTRUCTION	JMV	PYT	SDB	

DATE OF ISSUE ____ DWN BY ____ DES BY ____ CHK BY ____ APP BY ____

ET ENVIRONMENTAL CORPORATION

WASTE MANAGEMENT

RECORD DRAWING

OLYMPIC VIEW TRANSFER STATION
ELECTRICAL
ELECTRICAL PANEL SCHEDULES

DRAWING NO. E8

PROJECT NO. 802763

SW-0043

Generator set data sheet

Model:	**DSHAD**
Frequency:	**60 Hz**
Fuel type:	**Diesel**
kW rating:	**230 Standby** **209 Prime**
Emissions level:	**EPA NSPS Stationary Emergency Tier 3**

Exhaust emission data sheet:	**EDS-1075**
Exhaust emission compliance sheet:	**EPA-1102**
Sound performance data sheet:	**MSP-1049**
Cooling performance data sheet:	**MCP-165**
Prototype test summary data sheet:	**PTS-162**
Standard set-mounted radiator cooling outline:	**0500-4303**
Optional set-mounted radiator cooling outline:	
Optional heat exchanger cooling outline:	
Optional remote radiator cooling outline:	

Fuel consumption	**Standby**				**Prime**				**Continuous**
	kW (kVA)				**kW (kVA)**				**kW (kVA)**
Ratings	230 (288)				209 (261)				
Load	**1/4**	**1/2**	**3/4**	**Full**	**1/4**	**1/2**	**3/4**	**Full**	**Full**
US gph	6.2	10.8	14.7	18.2	5.8	10.1	13.8	17.0	
L/hr	23	41	57	69	22	38	52	64	

Engine	**Standby rating**	**Prime rating**	**Continuous rating**
Engine manufacturer	Cummins Inc.		
Engine model	QSL9-G2 NR3		
Configuration	Cast iron, with replaceable wet cylinder liners, in-line 6 cylinder		
Aspiration	Turbocharged and CAC		
Gross engine power output, kW_m (bhp)	271.5 (364.0)	238.7 (320.0)	
BMEP at set rated load, kPa (psi)	1979 (287)	1816 (263)	
Bore, mm (in.)	114.0 (4.49)		
Stroke, mm (in.)	145 (5.69)		
Rated speed, rpm	1800		
Piston speed, m/s (ft/min)	8.7 (1707.0)		
Compression ratio	16.8:1		
Lube oil capacity, L (qt)	26.5 (28.0)		
Overspeed limit, rpm	2100 ± 50		
Regenerative power, kW	35.00		

©2017 Cummins Inc. | D-3453 (10/17)

Fuel flow	Standby rating	Prime rating	Continuous rating
Fuel flow at rated load, L/hr (US gph)	162.8 (43.0)		
Maximum inlet restriction, mm Hg (in Hg)	152.4 (6.0)		
Maximum return restriction, mm Hg (in Hg)	254.0 (10.0)		

Air

Combustion air, m^3/min (scfm)	20.9 (739.0)	20.8 (733.0)	
Maximum air cleaner restriction with clean filter, kPa (in H_2O)	3.7 (15)		
Alternator cooling air, m^3/min (cfm)	41.3 (1460.0)		

Exhaust

Exhaust flow at set rated load, m^3/min (cfm)	33.3 (1176)	31.0 (1157)	
Exhaust temperature, °C (°F)	600 (1110.0)	572 (1063.0)	
Maximum back pressure, kPa (in H_2O)	10.2 (41.0)		

Standard set-mounted radiator cooling (non-seismic)

Ambient design, °C (°F)	52 (126)	48 (118)	
Fan load, kW_m (HP)	16.4 (22)		
Coolant capacity (with radiator), L (US gal)	29.5 (7.8)		
Cooling system air flow, m^3/min (scfm)	248 (8769)		
Total heat rejection, MJ/min (Btu/min)	7.8 (7374)	7.6 (7222)	
Maximum cooling air flow static restriction, kPa (in H_2O)	0.12 (0.5)		

Optional set-mounted radiator cooling

Ambient design, °C (°F)	
Fan load, kW_m (HP)	
Coolant capacity (with radiator), L (US gal)	
Cooling system air flow, m^3/min (scfm)	
Total heat rejection, MJ/min (Btu/min)	
Maximum cooling air flow static restriction, kPa (in H_2O)	

©2017 Cummins Inc. | D-3453 (10/17)

Optional heat exchanger cooling	Standby rating	Prime rating	Continuous rating
Set coolant capacity, L (US gal)			
Heat rejected, jacket water circuit, MJ/min (Btu/min)			
Heat rejected, aftercooler circuit, MJ/min (Btu/min)			
Heat rejected, fuel circuit, MJ/min (Btu/min)			
Total heat radiated to room, MJ/min (Btu/min)			
Maximum raw water pressure, jacket water circuit, kPa (psi)			
Maximum raw water pressure, aftercooler circuit, kPa (psi)			
Maximum raw water pressure, fuel circuit, kPa (psi)			
Maximum raw water flow, jacket water circuit, L/min (US gal/min)			
Maximum raw water flow, aftercooler circuit, L/min (US gal/min)			
Maximum raw water flow, fuel circuit, L/min (US gal/min)			
Minimum raw water flow at 27 °C (80 °F) inlet temp, jacket water circuit, L/min (US gal/min)			
Minimum raw water flow at 27 °C (80 °F) inlet temp, aftercooler circuit, L/min (US gal/min)			
Minimum raw water flow at 27 °C (80 °F) inlet temp, fuel circuit, L/min (US gal/min)			
Raw water delta P at min flow, jacket water circuit, kPa (psi)			
Raw water delta P at min flow, aftercooler circuit, kPa (psi)			
Raw water delta P at min flow, fuel circuit, kPa (psi)			
Maximum jacket water outlet temp, °C (°F)			
Maximum aftercooler inlet temp, °C (°F)			
Maximum aftercooler inlet temp at 25 °C (77 °F) ambient, °C (°F)			

Optional remote radiator cooling[1]	
Set coolant capacity, L (US gal)	
Max flow rate at max friction head, jacket water circuit, L/min (US gal/min)	
Max flow rate at max friction head, aftercooler circuit, L/min (US gal/min)	
Heat rejected, jacket water circuit, MJ/min (Btu/min)	
Heat rejected, aftercooler circuit, MJ/min (Btu/min)	
Heat rejected, fuel circuit, MJ/min (Btu/min)	
Total heat radiated to room, MJ/min (Btu/min)	
Maximum friction head, jacket water circuit, kPa (psi)	
Maximum friction head, aftercooler circuit, kPa (psi)	
Maximum static head, jacket water circuit, m (ft)	
Maximum static head, aftercooler circuit, m (ft)	
Maximum jacket water outlet temp, °C (°F)	
Maximum aftercooler inlet temp at 25 °C (77 °F) ambient, °C (°F)	
Maximum aftercooler inlet temp, °C (°F)	
Maximum fuel flow, L/hr (US gph)	
Maximum fuel return line restriction, kPa (in Hg)	

©2017 Cummins Inc. | D-3453 (10/17)

Weights[2]

Unit dry weight kgs (lbs)	
Unit wet weight kgs (lbs)	1561 (3442)

Notes:
[1] For non-standard remote installations contact your local Cummins representative.
[2] Weights represent a set with standard features. See outline drawing for weights of other configurations.

Derating factors

Standby	Engine power available up to 1100 m (3600 ft) at ambient temperature up to 40 °C (104 °F). Consult your Cummins distributor for temperature and ambient requirements outside these parameters.
Prime	Engine power available up to 850 m (2800 ft) at ambient temperature up to 40 °C (104 °F). Consult your Cummins distributor for temperature and ambient requirements outside these parameters.
Continuous	

Ratings definitions

Emergency Standby Power (ESP):	**Limited-Time Running Power (LTP):**	**Prime Power (PRP):**	**Base Load (Continuous) Power (COP):**
Applicable for supplying power to varying electrical load for the duration of power interruption of a reliable utility source. Emergency Standby Power (ESP) is in accordance with ISO 8528. Fuel stop power in accordance with ISO 3046, AS 2789, DIN 6271 and BS 5514.	Applicable for supplying power to a constant electrical load for limited hours. Limited-Time Running Power (LTP) is in accordance with ISO 8528.	Applicable for supplying power to varying electrical load for unlimited hours. Prime Power (PRP) is in accordance with ISO 8528. Ten percent overload capability is available in accordance with ISO 3046, AS 2789, DIN 6271 and BS 5514.	Applicable for supplying power continuously to a constant electrical load for unlimited hours. Continuous Power (COP) is in accordance with ISO 8528, ISO 3046, AS 2789, DIN 6271 and BS 5514. No sustained overload capability is available at this rating.

Alternator data

Three phase table[1]		**125 °C**	**125 °C**	**150 °C**	**150 °C**						
Feature code		B414	B415	B268	B419						
Alternator data sheet number		213	212	212	212						
Voltage ranges		120/208 thru 139/240 240/416 thru 277/480	277/480	120/208 thru 139/240 240/416 thru 277/480	347/600						
Surge kW		233	233	233	233						
Motor Starting kVA (at 90% sustained voltage)	Shunt	770	212	770	770						
	PMG	920	920	920	920						

Full load current - amps at Standby rating	120/208 799	120/240 629	139/240 629	220/380 399	277/480 346	347/600 277

©2017 Cummins Inc. | D-3453 (10/17)

Alternator data (continued)

Single phase table[1]		**125 °C**									
Feature code		B414									
Alternator data sheet number		213									
Voltage ranges		120/240[2]									
Surge kW		233									
Motor Starting kVA (at 90% sustained voltage)	Shunt	420									
	PMG	500									

Full load current - amps at Standby rating	120/240[2] 639

Notes:
[1] Single phase power can be taken from a three phase generator set at up to 2/3 set rated 3-phase kW at 1.0 power factor.
[2] The broad range alternators can supply single phase output up to 2/3 set rated 3-phase kW at 1.0 power factor.

Formulas for calculating full load currents:

Three phase output

$$\frac{\text{kW} \times 1000}{\text{Voltage} \times 1.73 \times 0.8}$$

Single phase output

$$\frac{\text{kW} \times \text{SinglePhaseFactor} \times 1000}{\text{Voltage}}$$

Warning: Back feed to a utility system can cause electrocution and/or property damage. Do not connect to any building's electrical system except through an approved device or after building main switch is open.

For more information contact your local Cummins distributor or visit power.cummins.com

Our energy working for you.™

©2017 Cummins Inc. All rights reserved. Cummins is a registered trademark of Cummins Inc. PowerCommand, AmpSentry, InPower and "Our energy working for you." are trademarks of Cummins Inc. Other company, product, or service names may be trademarks or service marks of others. Specifications are subject to change without notice.
D-3453 (10/17)

Sound data

230DSHAD 60 Hz

Sound pressure level @ 7 meters, dB(A)

Configuration		Position (note 1)								8 Position Average
		1	2	3	4	5	6	7	8	
Standard – unhoused (note 3)	Infinite exhaust	88.2	92.2	89.6	90.5	86.2	93.0	91.6	92.5	90.9
F182 – weather w/ exhaust silencer	Mounted muffler	91.8	96.4	94.9	95.7	92.8	97.9	97.0	97.3	95.9
F172 – quiet site II first stage	Mounted muffler	92.1	92.8	83.4	82.9	77.9	82.1	83.7	92.8	89.0
F173 – quiet site II second stage	Mounted muffler	76.7	79.3	77.5	80.5	76.8	77.7	77.9	78.3	78.2

Note:
1. Position 1 faces the engine front at 23 feet (7 m) from surface of the generator set. The positions proceed around the generator set in a counter-clockwise direction in 45° increments.
2. Data based on full rated load with standard radiator fan package.
3. Sound data for generator set with infinite exhaust do not include exhaust noise.
4. Sound pressure levels per ANSI S1.13-1971 as applicable.
5. Reference sound pressure is 20 µPa.
6. Sound pressure levels are subject to instrumentation, measurement, installation and generator set variability.
7. Sound data with remote-cooled set are based on rated loads without fan noise.

Sound power level, dB(A)

Configuration		Octave band center frequency (Hz)								Sound power level
		63	125	250	500	1000	2000	4000	8000	
Standard – unhoused (note 3)	Infinite exhaust	79.0	93.8	107.8	111.5	114.0	111.9	106.5	103.8	117.8
F182 – weather w/ exhaust silencer	Mounted muffler	103.1	109.4	117.1	119.2	117.3	113.9	113.0	109.1	122.7
F172 – quiet site II first stage	Mounted muffler	87.3	94.9	103.8	108.9	111.2	110.1	103.8	96.6	115.1
F173 – quiet site II second stage	Mounted muffler	85.5	92.8	99.0	97.4	98.1	96.7	95.9	91.0	105.1

Note:
1. Sound pressure levels per ANSI S12.34-1988 and SIO 3744 as applicable.
2. Data based on full rated load with standard radiator fan package.
3. Sound data for generator set with infinite exhaust do not include exhaust noise.
4. Reference sound pressure is 1pW-1x10^{-12} W.
5. Sound pressure levels are subject to instrumentation, measurement, installation and generator set variability.
6. Sound data with remote-cooled set are based on rated loads without fan noise.

Exhaust sound pressure level @ 1 meter, dB(A)

Open exhaust (no muffler) @ rated load	Octave band center frequency (Hz)								Sound pressure level
	63	125	250	500	1000	2000	4000	8000	
	85	95	102	105	111	116	116	110	121

Note: Sound pressure level per ISO 6798 Annex A as applicable.

Specification sheet

Diesel generator set QSL9-G2 series engine

175 kW - 230 kW Standby

Description

Cummins® commercial generator sets are fully integrated power generation systems providing optimum performance, reliability and versatility for stationary Standby and Prime Power applications.

Features

Cummins heavy-duty engine - Rugged 4-cycle, industrial diesel delivers reliable power, low emissions and fast response to load changes.

Alternator - Several alternator sizes offer selectable motor starting capability with low reactance 2/3 pitch windings, low waveform distortion with non-linear loads and fault clearing short-circuit capability.

Control system - The PowerCommand® electronic control is standard equipment and provides total genset system integration including automatic remote starting/stopping, precise frequency and voltage regulation, alarm and status message display, AmpSentry™ protection, output metering, auto-shutdown at fault detection and NFPA 110 Level 1 compliance.

Cooling system - Standard integral set-mounted radiator system, designed and tested for rated ambient temperatures, simplifies facility design requirements for rejected heat.

Enclosures - Optional weather protective and sound attenuated enclosures are available.

Fuel tanks - Dual wall sub-base fuel tanks are also available.

NFPA - The genset accepts full rated load in a single step in accordance with NFPA 110 for Level 1 systems.

Warranty and service - Backed by a comprehensive warranty and worldwide distributor network.

	Standby rating		Prime rating		Continuous rating		Data sheets	
Model	60 Hz kW (kVA)	50 Hz kW (kVA)	60 Hz kW (kVA)	50 Hz kW (kVA)	60 Hz kW (kVA)	50 Hz kW (kVA)	60 Hz	50 Hz
DSHAB	175 (219)		160 (200)				D-3451	
DSHAC	200 (250)		180 (225)				D-3452	
DSHAD	230 (288)		209 (261)				D-3453	

©2017 Cummins Inc. | S-1587 (10/17)

Generator set specifications

Governor regulation class	ISO 8528 Part 1 Class G3
Voltage regulation, no load to full load	± 0.5%
Random voltage variation	± 0.5%
Frequency regulation	Isochronous
Random frequency variation	± 0.25%
Radio frequency emissions compliance	Meets requirements of most industrial and commercial applications.

Engine specifications

Bore	114.0 mm (4.49 in)
Stroke	145 mm (5.69 in)
Displacement	8.9 L (543 in^3)
Configuration	Cast iron, in-line 6 cylinder
Battery capacity	1500 amps minimum at ambient temperature of -18 °C (0 °F)
Battery charging alternator	100 amps
Starting voltage	12 volt, negative ground
Fuel system	Direct injection: number 2 diesel fuel, fuel filter, automatic electric fuel shutoff
Fuel filter	Single element, 10 micron filtration, spin-on fuel filter with water separator
Air cleaner type	Dry replaceable element
Lube oil filter type(s)	Spin-on, full flow
Standard cooling system	High ambient radiator

Alternator specifications

Design	Brushless, 4 pole, drip proof revolving field
Stator	2/3 pitch
Rotor	Single bearing, flexible discs
Insulation system	Class H
Standard temperature rise	150 °C Standby at 40 °C ambient
Exciter type	Torque match (shunt)
Phase rotation	A (U), B (V), C (W)
Alternator cooling	Direct drive centrifugal blower
AC waveform Total Harmonic Distortion (THDV)	< 5% no load to full linear load, < 3% for any single harmonic
Telephone Influence Factor (TIF)	< 50 per NEMA MG1-22.43
Telephone Harmonic Factor (THF)	< 3

Available voltages

Three phase reconnectable				Single phase non-reconnectable	Three phase non-reconnectable	
• 120/208 • 240/416	• 120/240 • 254/440	• 127/220 • 277/480	• 139/240	• 120/241	• 220/380	• 347/600

Note: Consult factory for other voltages.

©2017 Cummins Inc. | S-1587 (10/17)

Generator set options and accessories

Engine

- 120/240 V 1500 W coolant heater
- 120/240 V 150 W lube oil heater
- Heavy duty air cleaner
- Engine oil temperature

Fuel system

- 12 hour sub-base tank (dual wall)
- 24 hour sub-base tank (dual wall)
- 473 L (125 gal) sub-base tank (single wall)

Alternator

- 105 °C rise
- 125 °C rise
- 120/240 V 100 W anti-condensation heater
- PMG excitation
- Single phase

Exhaust system

- Genset mounted muffler
- Heavy duty exhaust elbow
- Slip on exhaust connection

Generator set

- AC entrance box
- Battery
- Battery charger
- Enclosure: aluminum, steel, weather protective or sound attenuated
- Export box packaging
- UL 2200 Listed
- Main line circuit breaker
- PowerCommand Network Communications module (NCM)
- Remote annunciator panel
- Spring isolators
- 2 year Prime power warranty
- 2 year Standby power warranty
- 5 year Basic power warranty

Note: Some options may not be available on all models - consult factory for availability.

©2017 Cummins Inc. | S-1587 (10/17)

Control system PCC 2100

PowerCommand control is an integrated generator set control system providing governing, voltage regulation, engine protection and operator interface functions. Major features include:

- Integral AmpSentry™ Protective Relay providing a full range of alternator protection functions that are matched to the alternator provided.
- Battery monitoring and testing features and smart starting control system.
- Three phase sensing, full wave rectified voltage regulation system, with a PWM output for stable operation with all load types.
- Standard PCCNet™ and optional Echelon® LONWORKS® network interface.
- Control suitable for operation in ambient temperatures from -40 °C to +70 °C (-40 °F to +158 °F) and altitudes to 5000 meters (13,000 feet).
- Prototype tested; UL, CSA, and CE compliant.
- InPower™ PC-based service tool available for detailed diagnostics.

Operator/display panel

- Off/manual/auto mode switch
- Manual run/stop switch
- Panel lamp test switch
- Emergency stop switch
- Alpha-numeric display with pushbutton access for viewing engine and alternator data and providing setup, controls and adjustments
- LED lamps indicating genset running, not in auto, common warning, common shutdown
- Configurable LED lamps (5)
- Configurable for local language

Engine protection

- Overspeed shut down
- Low oil pressure warning and shut down
- High coolant temperature warning and shut down
- High oil temperature warning (some models)
- Low coolant level warning or shut down
- Low coolant temperature warning
- High and low battery voltage warning
- Weak battery warning
- Dead battery shut down
- Fail to start (overcrank) shut down
- Fail to crank shut down
- Redundant start disconnect
- Cranking lockout
- Sensor failure indication

Engine data

- DC voltage
- Lube oil pressure
- Coolant temperature
- Lube oil temperature (some models)
- Engine speed

AmpSentry AC protection

- Over current and short-circuit shut down
- Over current warning
- Single and three phase fault regulation
- Over and under voltage shut down
- Over and under frequency shut down
- Overload warning with alarm contact
- Reverse power and reverse Var shut down
- Excitation fault

Alternator data

- Line-to-Line and Line-to-Neutral AC volts
- Three phase AC current
- Frequency
- Total and individual phase power factor, kW and kVA

Other data

- Genset model data
- Start attempts, starts, running hours
- kW hours (total and since reset)
- Fault history
- Load profile (hours less than 30% and hours more than 90% load)
- System data display (optional with network and other PowerCommand gensets or transfer switches)

Governing

- Digital electronic isochronous governor
- Temperature dynamic governing
- Smart idle speed mode
- Glow plug control (some models)

Voltage regulation

- Digital PWM electronic voltage regulation
- Three phase Line-to-Neutral sensing
- Suitable for PMG or shunt excitation
- Single and three phase fault regulation
- Configurable torque matching

Control functions

- Data logging on faults
- Fault simulation (requires InPower)
- Time delay start and cooldown
- Cycle cranking
- PCCNet interface
- Configurable customer inputs (4)
- Configurable customer outputs (4)
- Configurable network inputs (8) and outputs (16) (with optional network)
- Remote emergency stop

Options

- LED bargraph AC data display
- Thermostatically controlled space heater
- Key-type mode switch
- Ground fault module
- Auxiliary relays (3)
- Echelon LONWORKS interface
- Modion Gateway to convert to Modbus (loose)
- PowerCommand iWatch web server for remote monitoring and alarm notification (loose)
- Digital input and output module(s) (loose)
- Remote annunciator (loose)

For further detail see document S-1409.

©2017 Cummins Inc. | S-1587 (10/17)

Emergency Standby Power (ESP):

Applicable for supplying power to varying electrical load for the duration of power interruption of a reliable utility source. Emergency Standby Power (ESP) is in accordance with ISO 8528. Fuel Stop power in accordance with ISO 3046, AS 2789, DIN 6271 and BS 5514.

Limited-Time Running Power (LTP):

Applicable for supplying power to a constant electrical load for limited hours. Limited Time Running Power (LTP) is in accordance with ISO 8528.

Prime Power (PRP):

Applicable for supplying power to varying electrical load for unlimited hours. Prime Power (PRP) is in accordance with ISO 8528. Ten percent overload capability is available in accordance with ISO 3046, AS 2789, DIN 6271 and BS 5514.

Base Load (Continuous) Power (COP):

Applicable for supplying power continuously to a constant electrical load for unlimited hours. Continuous Power (COP) in accordance with ISO 8528, ISO 3046, AS 2789, DIN 6271 and BS 5514.

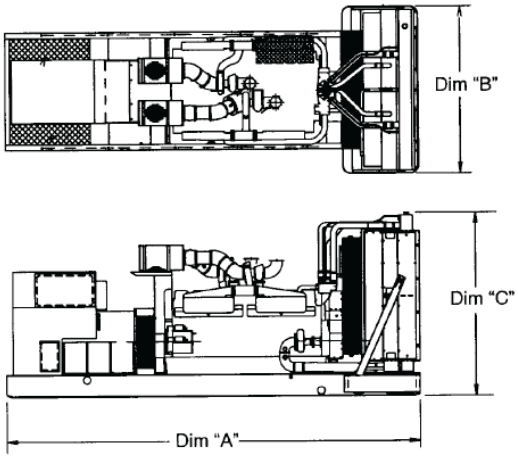

This outline drawing is for reference only.
See respective model data sheet for specific model outline drawing number.

Do not use for installation design

Model	Dim "A" mm (in.)	Dim "B" mm (in.)	Dim "C" mm (in.)	Set weight* dry kg (lbs)	Set weight* wet kg (lbs)
DSHAB	2662 (104.8)	1016 (40.0)	1361 (53.6)		1561 (3442)
DSHAC	2662 (104.8)	1016 (40.0)	1361 (53.6)		1561 (3442)
DSHAD	2667 (105.0)	1016 (40.0)	1372 (54.0)		1469 (3238)

*Weights represent a set with standard features. See outline drawings for weights of other configurations.

Codes and standards

Codes or standards compliance may not be available with all model configurations – consult factory for availability.

ISO 9001	This generator set is designed in facilities certified to ISO 9001 and manufactured in facilities certified to ISO 9001 or ISO 9002.	UL	The PowerCommand control is Listed to UL 508 - Category NITW7 for U.S. and Canadian usage.
PTS	The Prototype Test Support (PTS) program verifies the performance integrity of the generator set design. Cummins products bearing the PTS symbol meet the prototype test requirements of NFPA 110 for Level 1 systems.	**U.S. EPA**	Engine certified to Stationary Emergency U.S. EPA New Source Performance Standards,40 CFR 60 subpart IIII Tier 3 exhaust emission levels. U.S. applications must be applied per this EPA regulation.
CSA	All low voltage models are CSA certified to product class 4215-01.	**International Building Code**	The generator set package is available certified for seismic application in accordance with the following International Building Code: IBC2000, IBC2003, IBC2006, IBC2009 and IBC2012.

Warning: Back feed to a utility system can cause electrocution and/or property damage. Do not connect to any building's electrical system except through an approved device or after building main switch is open.

For more information contact your local Cummins distributor or visit power.cummins.com

Our energy working for you.™

©2017 Cummins Inc. All rights reserved. Cummins is a registered trademark of Cummins Inc. PowerCommand, AmpSentry, InPower and "Our energy working for you." are trademarks of Cummins Inc. Other company, product, or service names may be trademarks or service marks of others. Specifications are subject to change without notice.
S-1587 (10/17)

Specification sheet

Enclosures and tanks

35-230 kW gensets

Enclosure features

- 14-gauge, low carbon, hot-rolled ASTM A569 steel construction (panels)
- 12-gauge, low carbon, hot-rolled ASTM A569 steel construction (posts)
- Stainless steel hardware
- Compact footprint
- Zinc phosphate pre-treatment, e-coat primer and super durable powder topcoat paint minimize corrosion and color fade
- Package listed to UL 2200
- Fuel and electrical stub-up area within enclosure perimeter
- Two or three recessed doors per side, depending on generator set dimensions, for service access
- Doors key and padlockable for added security
- Weather protective seals around all doors on sound-attenuated enclosures
- Enclosed exhaust silencer improves safety and protects against rust
- Critical sound level exhaust silencers in sound-attenuated enclosures
- Rain collar and rain cap
- Non-hydroscopic sound-attenuating material
- Easy access lifting points for spreader bars or forklift, depending on model
- Compatible with most under-set fuel tanks
- Enclosure attaches directly to generator set skid base or fuel tank, depending on model
- Designed for ambient temperatures up to 50 ºC (122 ºF)
- Refer to genset model cooling system data sheets for specific capabilities
- Enclosures are designed for outdoor use only

Options

- Two levels of sound attenuation, and weather protective enclosure, steel and aluminum (most models)
- Super durable powder coat painted aluminum construction minimizes corrosion and color fade, panels and posts.1” thick, ASTM B209, 5052 H32
- Aluminum wind rated to 150 mph (per ASCE 7-05 exposure D, category 1 importance factor) (also available on some steel enclosures)
- Window for control viewing
- Kits to up fit existing gensets or to upgrade existing enclosures with additional sound attenuation
- Exterior oil and coolant drains with interior valves for ease of service
- Overhead 2-point lifting brackets (some models)

©2017 Cummins Inc. | S-1012 (10/17)

Fuel tank features

- Rectangular, heavy gauge, welded steel construction
- UL 142 Listed
- ULC-S601-07 Listed
- NFPA 37 compliant
- Double wall with a sealed, separately vented, integral fuel containment basin
- Reinforced steel box channels for generator support
- Full height gussets provided at genset mounting holes
- Interior coated with a solvent-based rust preventative
- Emergency pressure relief vent cap
- Port for normal vent
- Top-mounted fuel gauge
- Fuel supply and return tubes
- Raised fuel fill
- Mounting brackets for optional pump and control
- Ground clearance to minimize bottom rusting
- Integral lifting points
- Tanks are leak-checked to ensure integrity of weld seams prior to shipment

Options

- Fuel pump and control
- Low fuel level switch
- Leak detection rupture basin switch
- Fuel level control float valve (some models)
- Accessory kits for U.S. regional codes (some models)

Dual wall sub-base fuel tanks – usable operating hours

Genset model	Gallons/ hour at full load	70 gallon tank	109 gallon tank	140 gallon tank	173 gallon tank	185 gallon tank	309 gallon tank	336 gallon tank	376 gallon tank	Gallons fuel after low level switch
30 DGHCA	2.4	12, 24		48						4.96
35 DGHCB	2.7	12, 24		48						4.96
35 DSFAA	3.8	18		37						4.96
40 DGHCC	3.1	12		24		48				6.96
40 DSFAB	4.5	16		31						4.96
50 DGCA	4.2	17		33						4.96
50 DSFAC	5.1	14		27						4.96
60 DGCB	4.7	15		30						4.96
60 DSFAD	5.9	12		24						4.96
80 DGCG	6.3	11		22						4.96
80 DSFAE	6.9	10		20						4.96
100 DSGAA	8.5						36			21
125 DSGAB	10.6						30			21
150 DSGAC	12.2						25			21
175 DSGAD	13.1								28	23
200 DSGAE	14.8								25	23
230 DSHAD	18.2		6		10			18		

Operating hours are measured at 60 Hz, Standby rating.

©2017 Cummins Inc. | S-1012 (10/17)

Enclosure package sound pressure levels @ 7 meters dB(A)

Genset model	Weather protective enclosure steel: F182 aluminum: F216*	Level 1 sound attenuated enclosure steel: F172 aluminum: F231*	Level 2 sound attenuated enclosure steel: F173 aluminum: F217*	Level 3 sound attenuated enclosure steel: F232 aluminum: F233*
Natural gas				
35 GGPA	82	74	63	N/A
40 GGPB	83	74	65	N/A
45/50 GGPC	83	74	65	N/A
60 GGHE	86	77	68	N/A
70/75 GGHF	87	77	69	N/A
85 GGHG	80	76	70	N/A
100 GGHH	80	76	70	N/A
125 GGHJ	86	82	75	N/A
Diesel				
30 DGHCA	76	68	62	N/A
30 DGHCB	76	68	62	N/A
35 DSFAA	87	79	70	N/A
40 DGHCC	76	69	62	N/A
40 DSFAB	87	79	70	N/A
50 DGCA	83	72	66	N/A
50 DSFAC	87	79	70	N/A
60 DGCB	84	73	67	N/A
60 DSFAD	87	79	71	N/A
80 DGCG	84	76	67	N/A
80 DSFAE	87	82	72	N/A
100 DSGAA	87	N/A	72	69
125 DSGAB	88	N/A	73	69
150 DSGAC	88	N/A	73	70
175 DSGAD	89	N/A	74	70
200 DSGAE	89	N/A	74	71
230 DSHAD	96	89	78	N/A

Where two natural gas ratings are shown above, the first is the natural gas rating and the second is the propane rating. Data is a measured average of 8 positions, and is 60 Hz, full load Standby rating, steel enclosures only.

**Sound levels on aluminum enclosures are approximately 2 dB(A) higher than steel as measured above.*

©2017 Cummins Inc. | S-1012 (10/17)

Diesel package dimensions of enclosure, exhaust system and UL tank

Weather protective

Kilowatt rating	Tank size	Length (in.)	Width (in.)	Height (in.)	Weight (lbs)
35 - 80 kW	**70 gallon tank**	83	40	65	810 steel, 729 aluminum
	140 gallon tank	83	40	73	960 steel, 879 aluminum
	185 gallon tank	83	40	77	1062 steel, 981 aluminum
100 - 230 kW	**109 gallon tank**	105	40	69	1010 steel, 888 aluminum
	173 gallon tank	105	40	74	1136 steel, 1014 aluminum
	309 gallon tank	105	44	88	4838 steel, 4416 aluminum
	336 gallon tank	105	40	88	1369 steel, 1247 aluminum
	376 gallon tank	138	43	90	5563 steel, 5141 aluminum

Level 1 sound attenuated

Kilowatt rating	Tank size	Length (in.)	Width (in.)	Height (in.)	Weight (lbs)
35 - 80 kW	**70 gallon tank**	83	40	83	1246 steel
	140 gallon tank	83	40	91	1396 steel
	185 gallon tank	83	40	95	1498 steel
100 - 230 kW	**109 gallon tank**	108	40	87	1510 steel
	173 gallon tank	108	40	92	1636 steel
	336 gallon tank	108	40	106	1869 steel

Level 2 sound attenuated

Kilowatt rating	Tank size	Length (in.)	Width (in.)	Height (in.)	Weight (lbs)
35 - 80 kW	**70 gallon tank**	102	40	83	1443 steel, 1186 aluminum
	140 gallon tank	102	40	91	1593 steel, 1336 aluminum
	185 gallon tank	102	40	95	1695 steel, 1438 aluminum
100 - 230 kW	**109 gallon tank**	142	40	87	1904 steel, 1538 aluminum
	173 gallon tank	142	40	92	2030 steel, 1664 aluminum
	309 gallon tank	145	43	97	5852 steel, 4780 aluminum
	336 gallon tank	142	40	106	2263 steel, 1897 aluminum
	376 gallon tank	149	43	99	6357 steel, 5286 aluminum

Level 3 sound attenuated

Kilowatt rating	Tank size	Length (in.)	Width (in.)	Height (in.)	Weight (lbs)
100 – 200 kW	**309 gallon tank**	158	43	97	6052 steel, 4852 aluminum
	376 gallon tank	162	43	99	6557 steel, 5358 aluminum

©2017 Cummins Inc. | S-1012 (10/17)

Spark ignited package dimensions of enclosure and exhaust system

Weather protective

Genset model	Length (in.)	Width (in.)	Height (in.)	Weight (lbs) Weather protective enclosure package
35 GGPA	83 in.	40 in.	54 in.	310 lbs. steel, 229 lbs. aluminum
40 GGPB	83 in.	40 in.	54 in.	310 lbs. steel, 229 lbs. aluminum
45/50 GGPC	83 in.	40 in.	54 in.	310 lbs. steel, 229 lbs. aluminum
60 GGHE	83 in.	40 in.	54 in.	310 lbs. steel, 229 lbs. aluminum
70 GGHF	83 in.	40 in.	54 in.	310 lbs. steel, 229 lbs. aluminum
85 GGHG	105 in.	41 in.	70 in.	520 lbs. steel, 275 lbs. aluminum
100 GGHH	105 in.	41 in.	70 in.	520 lbs. steel, 275 lbs. aluminum
125 GGHJ	105 in.	41 in.	70 in.	520 lbs. steel, 275 lbs. aluminum

Level 1 sound attenuated

Genset model	Length (in.)	Width (in.)	Height (in.)	Weight (lbs) Sound attenuated Level 1 enclosure package
35 GGPA	83 in.	40 in.	72 in.	746 lbs. steel
40 GGPB	83 in.	40 in.	72 in.	746 lbs. steel
45/50 GGPC	83 in.	40 in.	72 in.	746 lbs. steel
60 GGHE	83 in.	40 in.	72 in.	746 lbs. steel
70 GGHF	83 in.	40 in.	72 in.	746 lbs. steel
85 GGHG	105 in.	60 in.	70 in.	710 lbs. steel
100 GGHH	105 in.	60 in.	70 in.	710 lbs. steel
125 GGHJ	105 in.	60 in.	70 in.	710 lbs. steel

Level 2 sound attenuated

Genset model	Length (in.)	Width (in.)	Height (in.)	Weight (lbs) Sound attenuated Level 2 enclosure package
35 GGPA	102 in.	40 in.	72 in.	943 lbs. steel, 686 lbs. aluminum
40 GGPB	102 in.	40 in.	72 in.	943 lbs. steel, 686 lbs. aluminum
45/50 GGPC	102 in.	40 in.	72 in.	943 lbs. steel, 686 lbs. aluminum
60 GGHE	102 in.	40 in.	72 in.	943 lbs. steel, 686 lbs. aluminum
70 GGHF	102 in.	40 in.	72 in.	943 lbs. steel, 686 lbs. aluminum
85 GGHG	142 in.	60 in.	70 in.	790 lbs. steel, 475 lbs. aluminum
100 GGHH	142 in.	60 in.	70 in.	790 lbs. steel, 475 lbs. aluminum
125 GGHJ	142 in.	60 in.	70 in.	790 lbs. steel, 475 lbs. aluminum

Unless otherwise noted above, dimensions are equal for aluminum and steel enclosure packages.
The weight does not include the generator set. Consult your local Cummins distributor or the appropriate generator specification sheet.

For more information contact your local Cummins distributor or visit power.cummins.com

Our energy working for you.™

©2017 Cummins Inc. All rights reserved. Cummins is a registered trademark of Cummins Inc. PowerCommand, AmpSentry, InPower and "Our energy working for you." are trademarks of Cummins Inc. Other company, product, or service names may be trademarks or service marks of others. Specifications are subject to change without notice.
S-1012 (10/17)

0500_3283 D

TABULATION		
MODEL	DIMENSION "A"	WEIGHT kg (lbs)
DGDA, DB	3137 [123.5]	534 (1175)
DGDK,DGEA,FA,FB,FC,FS GGKB,KC,KD,HG,HH DSHAA,AB,AC,AD,AE,AF (SHOWN)	3617 [142.4]	611 (1344)

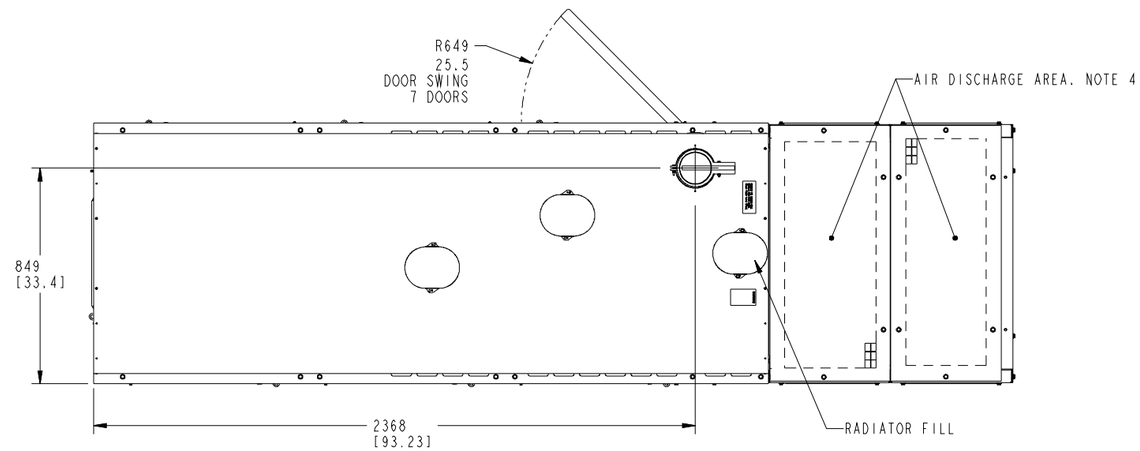

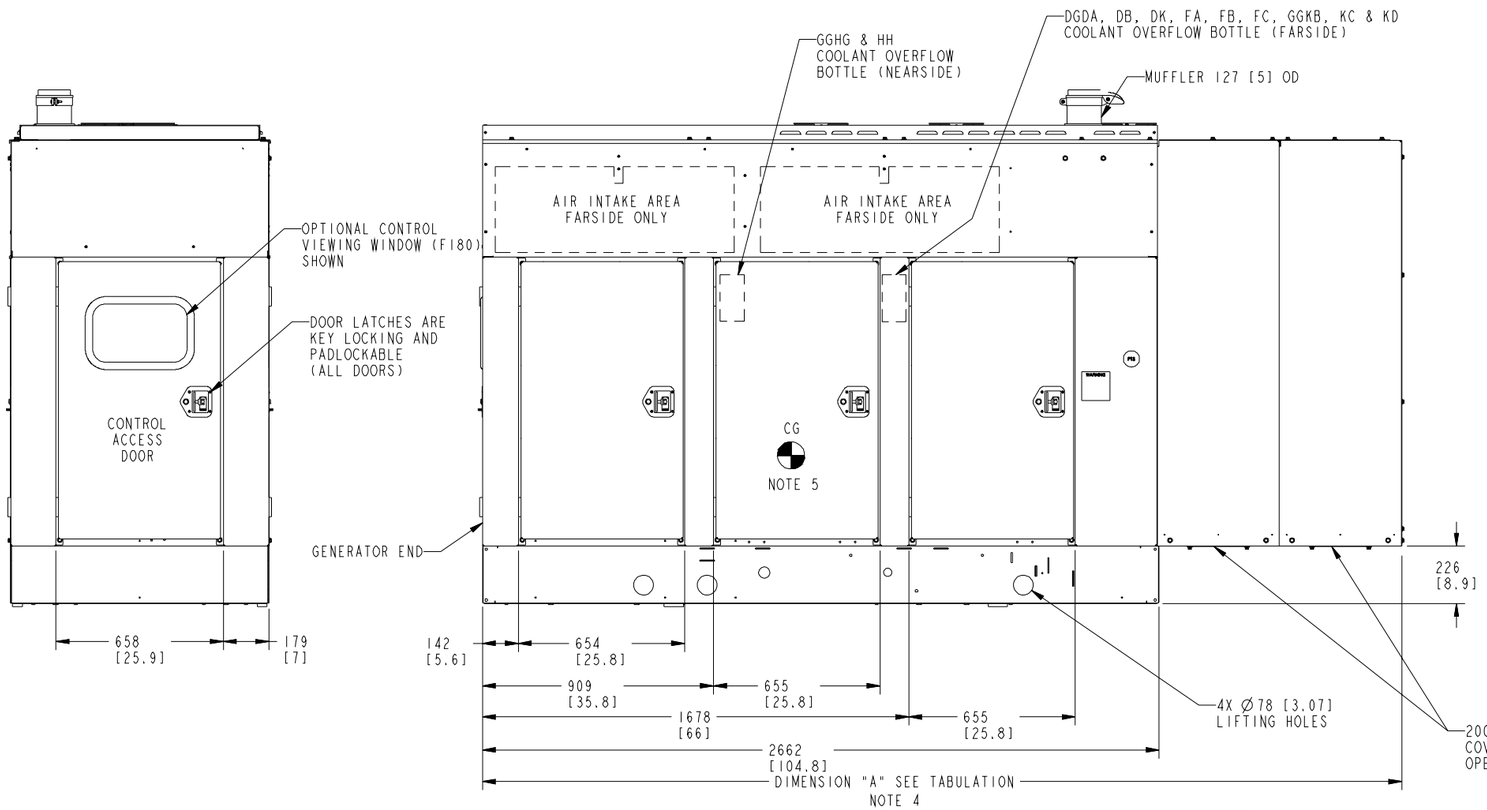

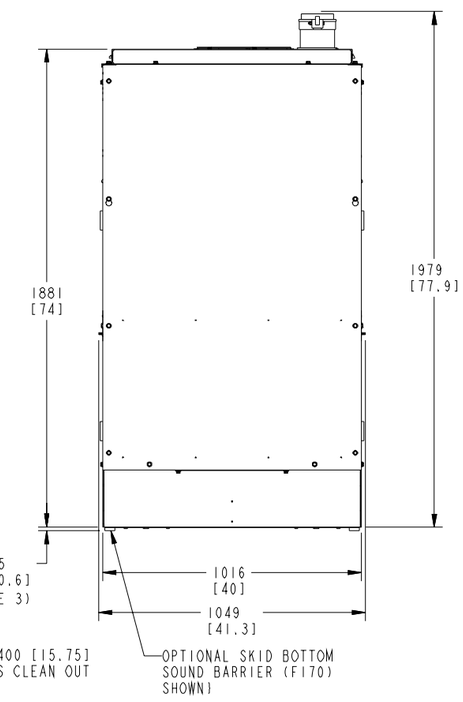

ER NO.	LTR	NO.	REVISION	ZONE	DR	CHKR	APPROVED	DATE
78025	A	1	PRODUCTION_RELEASE	-	GAC	GB	BELCZAK	09-30-98
FRD18465	B	1	SEE ECO	-	JJJ	BG	ELN	12-01-03
FRD19305	C	1	ADD COOLANT OVERFLOW BOTTLE	3C	JJJ	ELN	ELN	02-03-04
FRD20202	D	1	ADD COOLANT OVERFLOW BOTTLE LOCATION FOR GGHG & HH	4C	SJG	AJ	A JAMA	05-12-04
FRD19878	E	1	ADD DGFS TO DRAWING	-	DAH	DDG	GILLETT	05-25-04
FRD21700	F	1	ADD CLEAN OUT OPENING	2A	WP	WP	JAMA	01-06-05
FRD35079	G	1	ADD DSHAA,AB,AC,AD,AE,AF TO TABULATION	-	CF	AJ	JAMA	02-04-08

NOTES:

1. DIMENSIONS SHOWN IN [ ] ARE INCHES.
2. HOUSING AND MUFFLER WEIGHT: SEE TABULATION
3. HEIGHT INCREASE OF 14.6 [0.6] WHEN OPTIONAL SKID SOUND BARRIER IS USED.
4. DGDA,DB PRODUCT USES ONLY ONE AIR DISCHARGE BOX. DGDK,DGEA,FA,FB,FC.FS AND GGKB,KC,KD DISCHARGE BOXES SHOWN.
5. THE CENTER OF GRAVITY (CG) OF THE GENERATOR SET WHEN EQUIPPED WITH THIS HOUSING SHIFTS APPROXIMATELY 61 [2.4] FOR DGDA,DB OR 139 [5.5] FOR THE DGDK,DGEA,FA,FB,FC,FS AND GGKB,KC,KD,HG,HH TOWARD THE RADIATOR END COMPARED TO THE EQUIVALENT NON-HOUSED PRODUCT WITH THE F179 SKID. SEE HOUSING READY SKID BASE OUTLINE DRAWING FOR CG LOCATION OF NON-HOUSED PRODUCT.

CLASSIFICATION OF CHARACTERISTICS
CRITICAL ●
MAJOR ◐ APPROVED G_BELCZAK
MINOR (NONE) DATE 09-30-98
LINE BELOW SYMBOL ● APPLIES TO UPPER LIMIT
LINE ABOVE SYMBOL ● APPLIES TO LOWER LIMIT
NO LINE WITH SYMBOL APPLIES TO BOTH LIMITS
▼KEY INSTRUCTION (NO TOLERANCE)

METRIC DWG
Pro/ENGINEER

DO NOT SCALE PRINT

TOLERANCE UNLESS OTHERWISE SPECIFIED

DIM	mm	inch
	X ± 1	.X ±
	.X ± 0.8	.XX ±
	.XX ± 0.38	.XXX ±

HOLE			
0.00- 4.99	+0.15/-0.08	.004-.200	+.006/-.003
5.00- 9.99	+0.20/-0.10	.201-.421	+.008/-.004
10.00-17.49	+0.25/-0.13	.422-.703	+.010/-.005
17.50-24.99	+0.30/-0.13	.704-.999	+.012/-.005

ANG TOL± 1.0°
DRAWN TO SCALE OF 3/32

SHIP TO
COPIED FROM
THIRD ANGLE PROJECTION

THIS DOCUMENT IS THE PROPERTY OF ONAN CORPORATION. IT CONTAINS PROPRIETARY AND CONFIDENTIAL INFORMATION WHICH MUST NOT BE DUPLICATED, USED OR DISCLOSED OTHER THAN AS EXPRESSLY AUTHORIZED BY ONAN CORPORATION OR ITS REPRESENTATIVE

ITEM	PART NO.	DWG SIZE	DESCRIPTION OR MATERIAL	REF DES

	NAME	DATE
DR	G_COLLEEN	09-24-98
CHKR ☐ MFG ☐	S_JULIK	09-30-98
APPROVED	G_BELCZAK	09-30-98

FOR INTERPRETATION OF DIMENSIONING AND TOLERANCING, SEE ANSI Y14.5M-1982

MODEL FIRST USED ON
DGDA,DB,EA,FA,FB,FC,FS

QUIET SITE II, SECOND STAGE

Onan
Minneapolis, Minnesota 55432

TITLE
OUTLINE-ENCLOSURE (F173)

DWG NO. 0500_3283
SHEET 1 of 1
DWG SIZE D

Pro/ENGINEER

REL NO	LTR	NO	REVISION	DWN	CKD	APVD	DATE
ECO-128187	A	1	PRODUCTION_RELEASE	GJT	BJD	S.ANDERSON	04OCT12

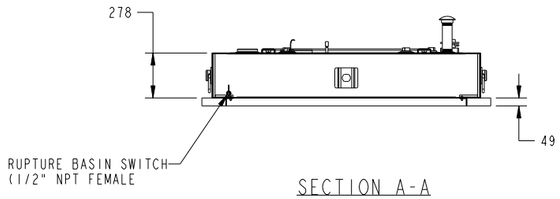

SECTION A-A

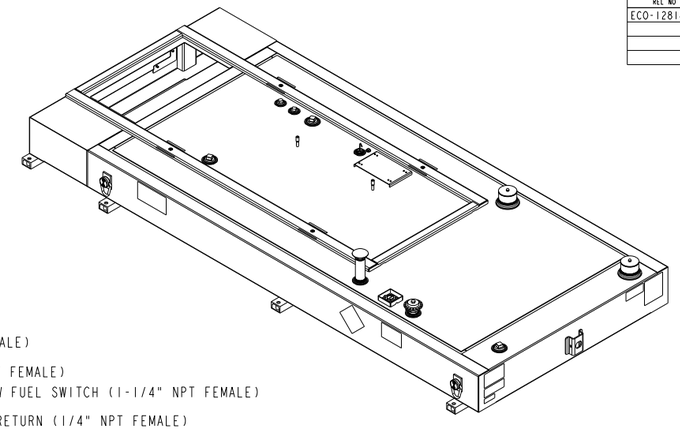

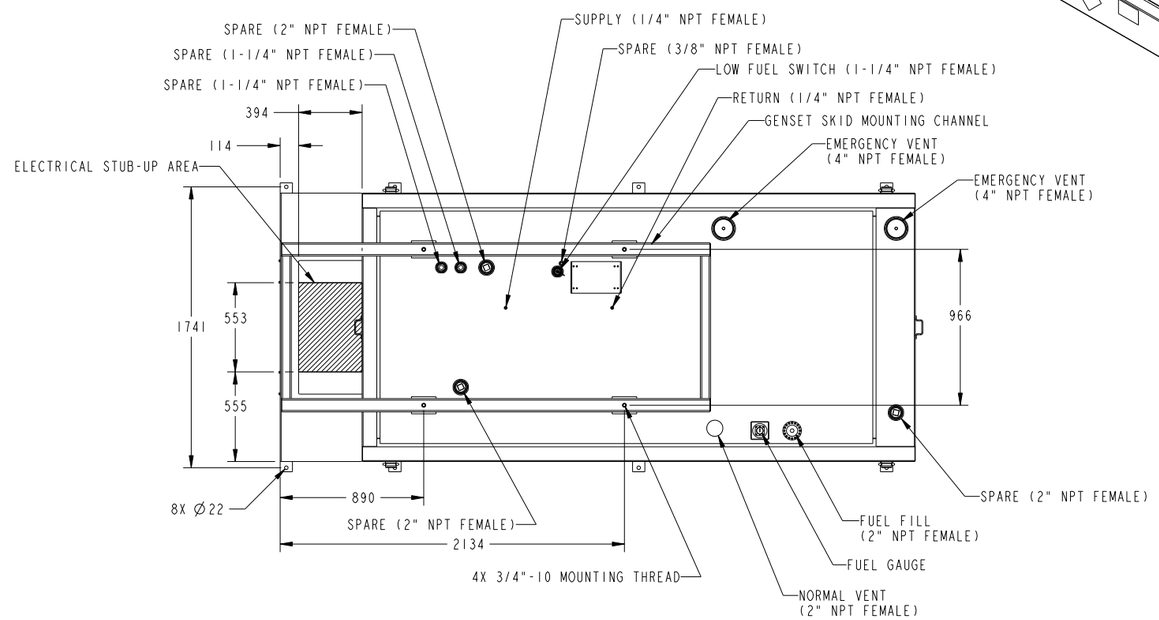

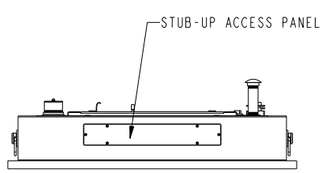

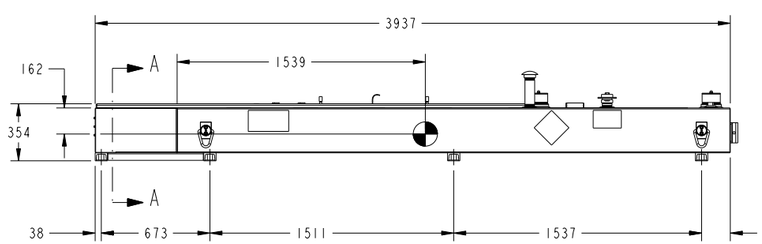

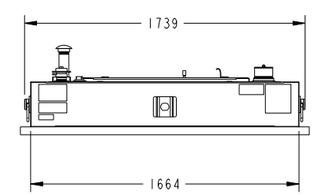

NOTES:

1. TANKS ARE UL-142 / ULC-S601-07 LISTED, SECONDARY CONTAINMENT GENERATOR BASE TANK. REFER TO TANK LABELS AND LOCAL CODE TO DETERMINE VENTING REQUIREMENTS FOR BOTH COMPARTMENTS.

2. SUBBASE FUEL TANK MOUNTING.
   EXCESSIVE TWISTING OF THE FUEL TANK, WHEN FASTENING IT TO A FOUNDATION, MAY RESULT IN STRUCTURAL FAILURE OF THE TANK. TO INSURE THE INSTALLATION DOES NOT EXCESSIVELY TWIST THE FUEL TANK. THE FOLLOWING PROCEDURE MUST BE OBSERVED:

   2.1 REFER TO CUMMINS POWER GENERATION APPLICATION MANUAL T-030 FOR GENERAL SET MOUNTING GUIDELINES.

   2.2 AFTER PLACING TANK ON FOUNDATION VERIFY MOUNTING LOCATIONS CONTACT FOUNDATION. MOUNT USING ONLY THE FOUR MOST OUTWARD HOLES IN THE REMOVABLE RISERS. SOME LOCAL CODES DO NOT REQUIRE THE USE OF REMOVABLE RISERS. MOUNT TANKS WITHOUT RISERS USING THE FOUR BOLT HOLES LOCATED IN THE TANK END BRACKETS.

   2.3 TIGHTEN TANK HOLD DOWN MOUNTING FASTENERS.

3. INDICATES PIPE SIZE OF INTERFACE PORT ON FUEL TANK FOR FEATURE OR OPTION INDICATED.

4. LOW FUEL LEVEL SWITCH PROVIDES AN ELECTRICAL CONTACT CLOSURE WHEN APPROXIMATELY 50% OF USABLE FUEL REMAIN IN THE TANK.

5. RUPTURE BASIN SWITCH PROVIDES AN ELECTRICAL CONTACT CLOSURE WHEN FLUID IS PRESENT IN THE RUPTURE BASIN.

6. TANK VOLUME - 1200 LITERS (317 GAL) NOMINAL
   1067 LITERS (282 GAL) MAXIMUM USABLE

7. TANK DRY WEIGHT - 1179 kg (2600 lbs)

8. THIS PART IS MANUFACTURER SOURCE CONTROLLED

9. ALL DIMENSIONS ARE REFERENCE

10. FLORIDA DEPARTMENT OF ENVIRONMENTAL PROTECTION APPROVALS:
    FUEL TANK WITH SPILL CONTAINMENT: EQ-749.
    INTERSTITIAL RELEASE DETECTION SYSTEM: EQ-682.

11. RUPTURE BASIN CAPACITY EQUAL TO 125% OF NOMINAL CAPACITY

-THIS IS A CONTROLLED ITEM-
PER CPG PROCEDURE FRE-1002

TO MAINTAIN COMPLIANCE WITH REQUIREMENTS OF THE CODES, STANDARDS, OR AGENCIES LISTED BELOW

☐ CSA ☐ UL ☐ CE ☐ RVIA ☐ ABYC
☒ IBC ☐ OTHER _____ ☐ OTHER _____

CHANGES, DEVIATIONS, OR SUBSTITUTIONS OF MATERIAL, PROCESS, OR PERFORMANCE FOR THIS ITEM MUST BE APPROVED BY THE FOLLOWING CONTROLLED ITEM APPROVER

RESPONSIBLE CIA ROLE STATIONARY GENSET
RESPONSIBLE CIA ROLE _____
RESPONSIBLE CIA ROLE _____

UNLESS OTHERWISE SPECIFIED, ALL DIMENSIONS ARE IN MILLIMETERS

DIM		HOLE
X	± 1	0.00- 4.99 +0.15/-0.08
.X	± 0.8	5.00- 9.99 +0.20/-0.10
.XX	± 0.38	10.00-17.49 +0.25/-0.13
		17.50-24.99 +0.30/-0.13

ANG TOL: ± 1.0° SCALE: 1/1

SIM TO A030Y654
DO NOT SCALE PRINT
- CONFIDENTIAL -
PROPERTY OF CUMMINS POWER GENERATION GROUP

DWN G. THOMAS
CKD B. DELANEY
APVD S. ANDERSON
DATE 04OCT12
FOR INTERPRETATION OF DIMENSIONING AND TOLERANCING, SEE ASME Y14.5M-1994
FIRST USED ON DG

CUMMINS POWER GENERATION
TANK, FUEL
317 GAL
SITE CODE PGF
DWG SIZE D A043V646
SHEET 1 of 1
DWG REV A

Drawing Name: A043V647 Revision: A
Part Name: A043V646 Revision: A
Sheet 1 of 2

Part A043V646 A

Description	Legacy Name	External Regulations	Application Status	Release Phase Code	Security Classification	Alternates
TANK,FUEL	A043V646	IBC	Accessories Only	Production	Proprietary	

Part Specifications :A043V646 A

Name	Description	Legacy Name
A030B356	SPECIFICATION,MATERIAL	CES10903
A043V647	DRAWING,ENGINEERING	A043V647

Creo Parametric

REL NO	LTR	NO	REVISION	DWN	CKD	APVD	DATE
ECO-137964	B	1	UPDATED IMAGES AND DIMENSIONS, SEE ECO	GJT	BG	S.ANDERSON	24SEP13

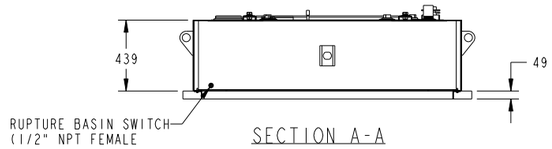

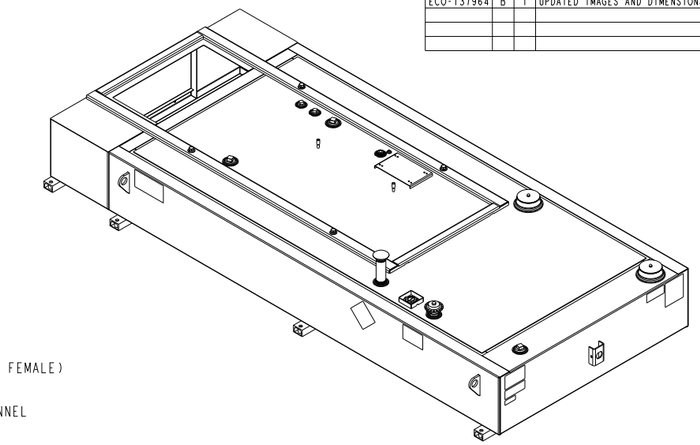

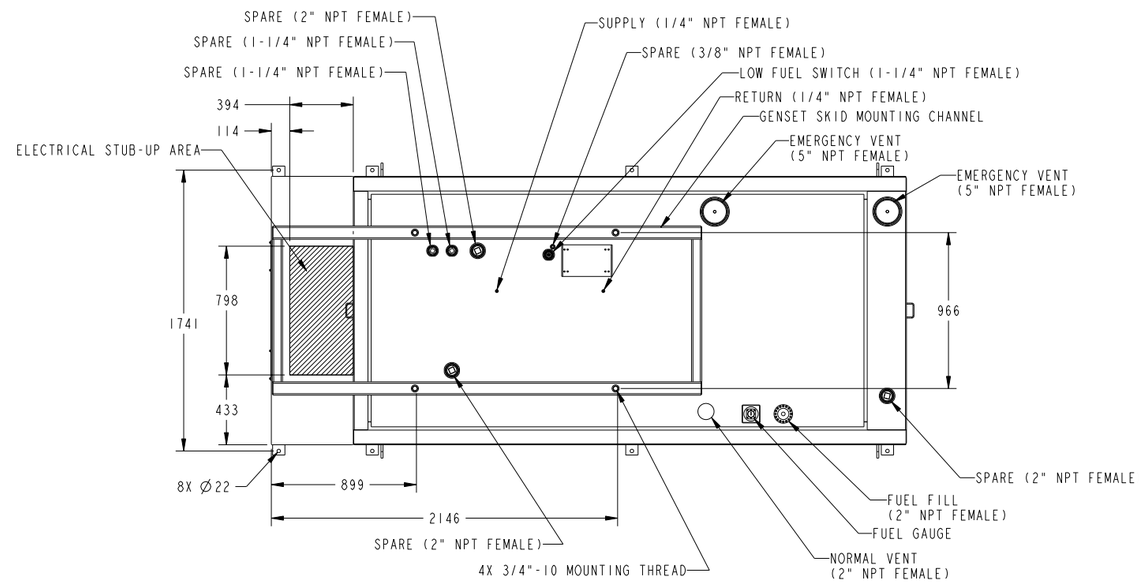

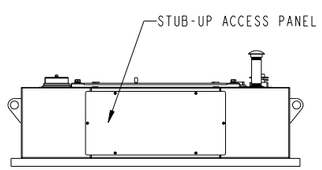

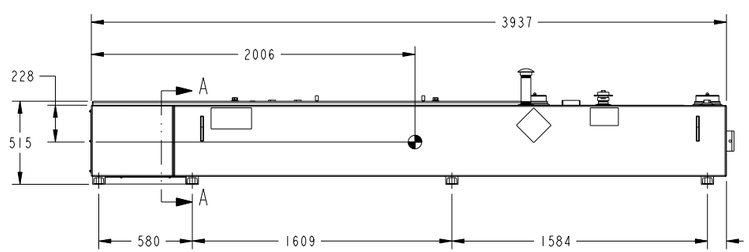

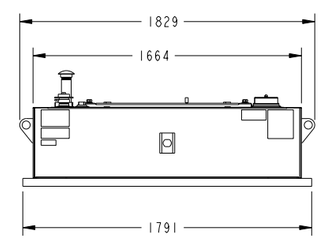

NOTES:

1. TANKS ARE UL-142 / ULC-S601-07 LISTED, SECONDARY CONTAINMENT GENERATOR BASE TANK. REFER TO TANK LABELS AND LOCAL CODE TO DETERMINE VENTING REQUIREMENTS FOR BOTH COMPARTMENTS.

2. SUBBASE FUEL TANK MOUNTING.
   EXCESSIVE TWISTING OF THE FUEL TANK, WHEN FASTENING IT TO A FOUNDATION, MAY RESULT IN STRUCTURAL FAILURE OF THE TANK. TO INSURE THE INSTALLATION DOES NOT EXCESSIVELY TWIST THE FUEL TANK. THE FOLLOWING PROCEDURE MUST BE OBSERVED:

   2.1 REFER TO CUMMINS POWER GENERATION APPLICATION MANUAL T-030 FOR GENERAL SET MOUNTING GUIDELINES.

   2.2 AFTER PLACING TANK ON FOUNDATION VERIFY MOUNTING LOCATIONS CONTACT FOUNDATION. MOUNT USING ONLY THE FOUR MOST OUTWARD HOLES IN THE REMOVABLE RISERS. SOME LOCAL CODES DO NOT REQUIRE THE USE OF REMOVABLE RISERS. MOUNT TANKS WITHOUT RISERS USING THE FOUR BOLT HOLES LOCATED IN THE TANK END BRACKETS.

   2.3 TIGHTEN TANK HOLD DOWN MOUNTING FASTENERS.

3. INDICATES PIPE SIZE OF INTERFACE PORT ON FUEL TANK FOR FEATURE OR OPTION INDICATED.

4. LOW FUEL LEVEL SWITCH PROVIDES AN ELECTRICAL CONTACT CLOSURE WHEN APPROXIMATELY 50% OF USABLE FUEL REMAIN IN THE TANK.

5. RUPTURE BASIN SWITCH PROVIDES AN ELECTRICAL CONTACT CLOSURE WHEN FLUID IS PRESENT IN THE RUPTURE BASIN.

6. TANK VOLUME - 1191 LITERS (526 GAL) NOMINAL
   1806 LITERS (477 GAL) MAXIMUM USABLE

7. TANK DRY WEIGHT - 1270 kg (2800 lbs)

8. THIS PART IS MANUFACTURER SOURCE CONTROLLED

9. ALL DIMENSIONS ARE REFERENCE

10. FLORIDA DEPARTMENT OF ENVIRONMENTAL PROTECTION APPROVALS: FUEL TANK WITH SPILL CONTAINMENT: EQ-749. INTERSTITIAL RELEASE DETECTION SYSTEM: EQ-682.

11. RUPTURE BASIN CAPACITY EQUAL TO 125% OF NOMINAL CAPACITY

-THIS IS A CONTROLLED ITEM-
PER CPG PROCEDURE FRE-1002

TO MAINTAIN COMPLIANCE WITH REQUIREMENTS OF THE CODES, STANDARDS, OR AGENCIES LISTED BELOW

☐ CSA ☐ UL ☐ CE ☐ RVIA ☐ ABYC
☒ IBC ☐ OTHER ____ ☐ OTHER ____

CHANGES, DEVIATIONS, OR SUBSTITUTIONS OF MATERIAL, PROCESS, OR PERFORMANCE FOR THIS ITEM MUST BE APPROVED BY THE FOLLOWING CONTROLLED ITEM APPROVER

RESPONSIBLE CIA ROLE STATIONARY GENSET
RESPONSIBLE CIA ROLE
RESPONSIBLE CIA ROLE

UNLESS OTHERWISE SPECIFIED, ALL DIMENSIONS ARE IN MILLIMETERS

DIM	X ± 1	HOLE	0.00- 4.99 +0.15/-0.08
	.X ± 0.8		5.00- 9.99 +0.20/-0.10
	.XX± 0.38		10.00-17.49 +0.25/-0.13
			17.50-24.99 +0.30/-0.13

ANG TOL: ± 1.0° SCALE: 1/1

SIM TO A030Y654
DO NOT SCALE PRINT
- CONFIDENTIAL -
PROPERTY OF CUMMINS POWER GENERATION GROUP

DWN G. THOMAS
CKD B. DELANEY
APVD S. ANDERSON
DATE 04OCT12
FOR INTERPRETATION OF DIMENSIONING AND TOLERANCING, SEE ASME Y14.5M-1994
FIRST USED ON DG

CUMMINS POWER GENERATION
TANK FUEL
526 GAL
SIZE CODE
DWG SIZE D A043V648
SHEET 1 of 1
DWG REV B

Drawing Name: A043V649 Revision: B
Part Name: A043V648 Revision: B
Sheet 1 of 2

Part A043V648 B

Description	Legacy Name	External Regulations	Application Status	Release Phase Code	Security Classification	Alternates
TANK,FUEL	A043V648	IBC	Accessories Only	Production	Proprietary	

Part Specifications :A043V648 B

Name	Description	Legacy Name
A030B356	SPECIFICATION,MATERIAL	CES10903
A043V649	DRAWING,ENGINEERING	A043V649

Creo Parametric

REL NO	LTR	NO	REVISION	DWN	CKD	APVD	DATE
ECO-137964	B	1	UPDATED IMAGES AND DIMENSIONS, SEE ECO	GJT	BG	S.ANDERSON	24SEP13

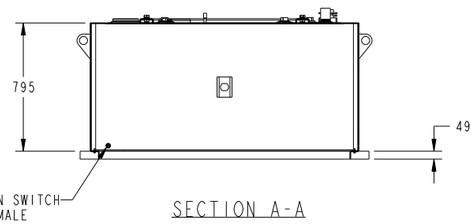

SECTION A-A

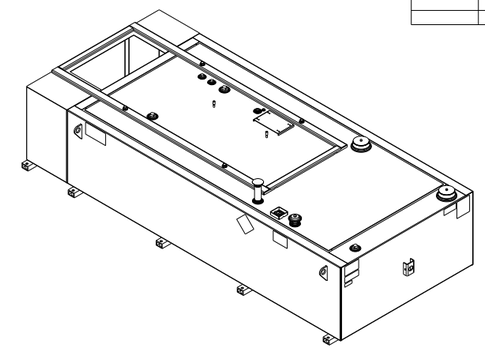

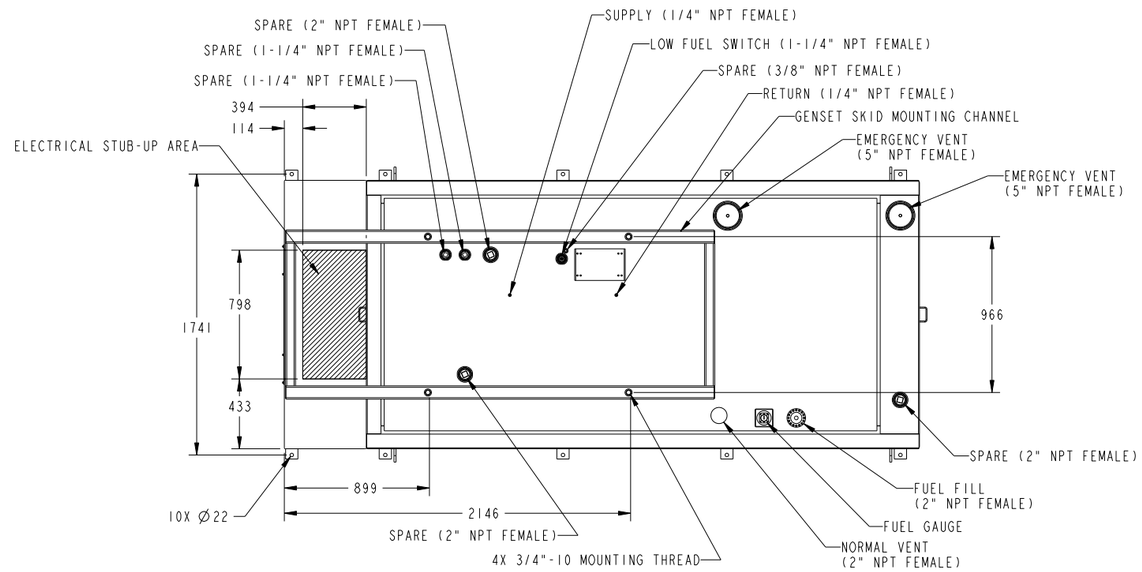

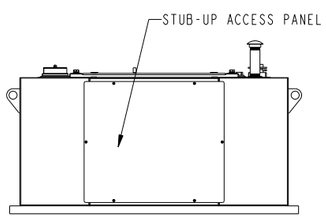

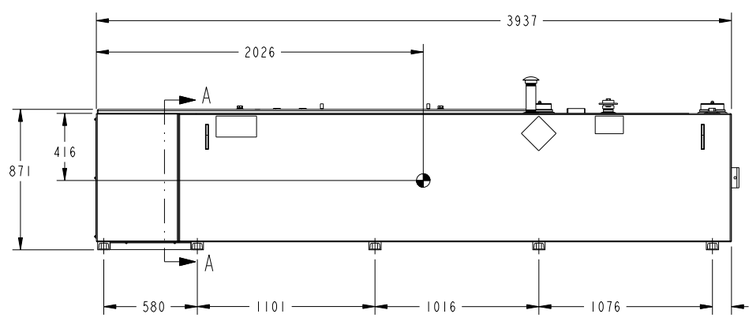

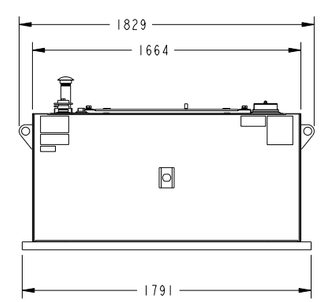

NOTES:

1. TANKS ARE UL-142 / ULC-S601-07 LISTED, SECONDARY CONTAINMENT GENERATOR BASE TANK. REFER TO TANK LABELS AND LOCAL CODE TO DETERMINE VENTING REQUIREMENTS FOR BOTH COMPARTMENTS.

2. SUBBASE FUEL TANK MOUNTING.
   EXCESSIVE TWISTING OF THE FUEL TANK, WHEN FASTENING IT TO A FOUNDATION, MAY RESULT IN STRUCTURAL FAILURE OF THE TANK. TO INSURE THE INSTALLATION DOES NOT EXCESSIVELY TWIST THE FUEL TANK. THE FOLLOWING PROCEDURE MUST BE OBSERVED:

   2.1 REFER TO CUMMINS POWER GENERATION APPLICATION MANUAL T-030 FOR GENERAL SET MOUNTING GUIDELINES.

   2.2 AFTER PLACING TANK ON FOUNDATION VERIFY MOUNTING LOCATIONS CONTACT FOUNDATION. MOUNT USING ONLY THE FOUR MOST OUTWARD HOLES IN THE REMOVABLE RISERS. SOME LOCAL CODES DO NOT REQUIRE THE USE OF REMOVABLE RISERS. MOUNT TANKS WITHOUT RISERS USING THE FOUR BOLT HOLES LOCATED IN THE TANK END BRACKETS.

   2.3 TIGHTEN TANK HOLD DOWN MOUNTING FASTENERS.

3. INDICATES PIPE SIZE OF INTERFACE PORT ON FUEL TANK FOR FEATURE OR OPTION INDICATED.

4. LOW FUEL LEVEL SWITCH PROVIDES AN ELECTRICAL CONTACT CLOSURE WHEN APPROXIMATELY 50% OF USABLE FUEL REMAIN IN THE TANK.

5. RUPTURE BASIN SWITCH PROVIDES AN ELECTRICAL CONTACT CLOSURE WHEN FLUID IS PRESENT IN THE RUPTURE BASIN.

6. TANK VOLUME - 3657 LITERS (966 GAL) NOMINAL
   3388 LITERS (895 GAL) MAXIMUM USABLE

7. TANK DRY WEIGHT - 1678 kg (3700 lbs)

8. THIS PART IS MANUFACTURER SOURCE CONTROLLED

9. ALL DIMENSIONS ARE REFERENCE

10. FLORIDA DEPARTMENT OF ENVIRONMENTAL PROTECTION APPROVALS:
    FUEL TANK WITH SPILL CONTAINMENT: EQ-749.
    INTERSTITIAL RELEASE DETECTION SYSTEM: EQ-682.

11. RUPTURE BASIN CAPACITY EQUAL TO 125% OF NOMINAL CAPACITY

-THIS IS A CONTROLLED ITEM-
PER CPG PROCEDURE FRE-1002

TO MAINTAIN COMPLIANCE WITH REQUIREMENTS OF THE CODES, STANDARDS, OR AGENCIES LISTED BELOW

☐ CSA ☐ UL ☐ CE ☐ RVIA ☐ ABYC
☒ IBC ☐ OTHER ☐ OTHER

CHANGES, DEVIATIONS, OR SUBSTITUTIONS OF MATERIAL, PROCESS, OR PERFORMANCE FOR THIS ITEM MUST BE APPROVED BY THE FOLLOWING CONTROLLED ITEM APPROVER

RESPONSIBLE CIA ROLE STATIONARY GENSET
RESPONSIBLE CIA ROLE
RESPONSIBLE CIA ROLE

UNLESS OTHERWISE SPECIFIED, ALL DIMENSIONS ARE IN MILLIMETERS

DIM		HOLE	
	X ± 1		0.00- 4.99 +0.15/-0.08
	.X ± 0.8		5.00- 9.99 +0.20/-0.10
			10.00-17.49 +0.25/-0.13
	.XX± 0.38		17.50-24.99 +0.30/-0.13

ANG TOL: ± 1.0° SCALE: 1/1

SIM TO A030Y654
DO NOT SCALE PRINT
- CONFIDENTIAL -
PROPERTY OF CUMMINS POWER GENERATION GROUP

DWN G. THOMAS
CKD B. DELANEY
APVD S. ANDERSON
DATE 04OCT12
FOR INTERPRETATION OF DIMENSIONING AND TOLERANCING, SEE ASME Y14.5M-1994
FIRST USED ON DG

CUMMINS POWER GENERATION
TANK, FUEL
966 GAL
SITE CODE PGF
DWG SIZE D
A043V650
SHEET 1 of 1
DWG REV B

Drawing Name: A043V651 Revision: B
Part Name: A043V650 Revision: B
Sheet 1 of 2

Part A043V650 B

Description	Legacy Name	External Regulations	Application Status	Release Phase Code	Security Classification	Alternates
TANK,FUEL	A043V650	IBC	Accessories Only	Production	Proprietary	

Part Specifications :A043V650 B

Name	Description	Legacy Name
A030B356	SPECIFICATION,MATERIAL	CES10903
A043V651	DRAWING,ENGINEERING	A043V651

Attachment D

OVTS Stormwater Management Alternatives Memorandum

DRAFT

Parametrix
ENGINEERING . PLANNING . ENVIRONMENTAL SCIENCES

60 WASHINGTON AVENUE, SUITE 390 | BREMERTON, WA 98337 | P 360.377.0014

TECHNICAL MEMORANDUM

DATE: September 22, 2020

TO: Kitsap County

FROM: Rhiannon Sayles

SUBJECT: Olympic View Transfer Station Stormwater Management Alternatives

CC:

PROJECT NUMBER: 553-1578-151

PROJECT NAME: Olympic View Transfer Station Facility Master Plan

INTRODUCTION

The purpose of this alternatives analysis is to determine potential stormwater improvements for the Olympic View Transfer Station (OVTS). As identified in the Technical Memorandum (TM) from Parametrix to Kitsap County (County) dated September 1, 2017, there is an existing stormwater issue where Pond D may overflow during large storm events, if operational intervention is not made to redistribute stormwater volumes. The Pond D overflow discharge is to the outfall which results in offsite drainage. Offsite discharge is only permitted during a storm event that exceeds the 100-year storm event. This memorandum builds on the work completed by Parametrix in 2017 and presents the County with two possible solutions for redistributing stormwater on-site to achieve 100% infiltration. Hydrologic modeling uses field infiltration rates collected in 2015 and does not account for evaporation.

The alternatives outlined in this memorandum consider current system performance, the previous analysis completed in 2017, potential pump redistribution of collected stormwater, and potential gravity redistribution of collected stormwater. Each alternative has been evaluated based on criteria such as capital cost, operation and maintenance (O&M) cost, schedule, operational disruptions required to implement, and required regulatory approvals.

EXISTING SITE

The OVTS site, including the contributing Brem-Air Disposal site to the south, is approximately 17.75 acres that is divided into three subbasins, each draining to one of three primary infiltration ponds. Based on more detailed topographical information, the total site area is slightly larger than previously estimated in 2017. The site contains four ponds total (A through D); however, Pond A functionally provides additional storage capacity to the subbasin with Pond C as the primary infiltration pond. Figure 1 shows the four ponds and the existing contributing subbasins. Figure 2 shows the existing stormwater management infrastructure. Figures are included in Attachment A. The original 2001 OVTS stormwater design sized the ponds based on infiltration testing that assumed the ponds would all infiltrate at 6 inches/hour. However, later testing by the County in 2015 showed that Ponds A and D have negligible infiltration, Pond B infiltrates at 11 inches/hour, and Pond C infiltrates at 5 inches/hour.

The west portion of the site is unique. Initially, all runoff is conveyed through the existing wet well to Pond A. Once the water in the pond reaches an elevation of 305.0 the pump within the wet well turns on and any additional subbasin runoff will be pump conveyed to Pond C. Pond C receives very little runoff from the adjacent areas and has a high infiltration rate so the pond does not retain a significant amount of water until it receives the pumped water from the lower subbasin.

Tables 1 and 2, below, show the existing basin runoff distribution and pond response. Pond A and Pond C are combined for modeling purposes. The two ponds act as one drainage basin with Pond A providing some storage capacity and Pond C providing storage and infiltration. The contributing areas were calculated using more detailed contour information than the 2017 model which yielded different contributing areas for each pond. Additionally, the assumption for existing conditions in the model was changed to grass to better reflect site conditions. These changes are reflected in the model outputs summarized below.

Table 1. Existing Basin Runoff and Pond Response During 100-yr Storm

Pond	Contributing Area (ac)	Infiltration Rate (in/hr)	Total Runoff Volume (cf)	Volume Infiltrated (cf)	Volume Detained (cf)	Overflow Volume (cf)	Resulting Pond Depth (ft)
A	3.34	0	73,320	0	12,312 (Pump On)	0	3.5
C		5		52,230	8,778	0	1.0
B	11.16	11	258,679	221,219	37,460	0	2.3
D	3.25	0	73,747	0	13,774	59,973	4.0
Total	17.75		405,746	273,449	119,985	59,973	

Table 2. Existing Pond Storage Capacity

Pond	Maximum Available Pond Depth (ft)	Total Storage Capacity (cf)	Capacity Used during 100-yr Storm (cf)	Remaining Available Capacity (cf)
A	3.5	12,312	12,312	0
C	2.5	26,299	8,778	17,521
B	4.0	72,884	37,460	35,424
D	4.0	13,774	13,774	0
Total		125,268	72,324	52,945

Under existing conditions, Pond D does not have the capacity to infiltrate the 100-year storm. Therefore, it overflows after the maximum depth is reached. Other ponds have the capacity to infiltrate storms up to and including the 100-year event. Detailed runoff calculation results are included in Attachment B.

GRAVITY ALTERNATIVE

The goal of the gravity alternative is to redistribute runoff contributing to Pond D to Pond B *before* the runoff reaches Pond D. Preliminary calculations show that if the subbasin areas of Ponds B and D are redistributed as shown in Figure 3 the site could successfully manage the 100-year storm without an overflow incident. There is

no need to modify Ponds A and C, so they remain unchanged. Tables 3 and 4 show the results for the proposed subbasins reconfiguration.

Table 3. Proposed Gravity Alternative Runoff and Pond Response During 100-yr Storm

Pond	Contributing Area (ac)	Infiltration Rate (in/hr)	Total Runoff Volume (cf)	Volume Infiltrated (cf)	Volume Detained (cf)	Overflow Volume (cf)	Resulting Pond Depth (ft)
A	3.34	0	73,320	0	12,312 (Pump On)	0	3.5
C		5		52,230	8,778	0	1.0
B	13.81	11	320,993	257,758	63,235	0	3.9
D	0.6	0	11,432	0	11,432	0	3.5
Total	17.75		405,745	309,988	83,445	0	`

Table 4. Proposed Gravity Alternative Storage Capacity

Pond	Maximum Available Pond Depth (ft)	Total Storage Capacity (cf)	Capacity Used during 100-yr Storm (cf)	Remaining Available Capacity (cf)
A	3.5	12,312	12,312	0
C	2.5	26,299	8,778	17,521
B	5.0	86,091	63,235	22,856
D	4.0	13,774	11,432	2,342
Total		138,475	95,757	42,718

The gravity alternative will require a number of infrastructure modifications as shown in Figure 4. Modifications include lowering the bottom elevation of Pond B by 1 foot, installing 580 feet of new storm drain pipe, installing 3 new catch basins, installing a new oil/water separator, abandoning 300 feet of existing storm drain pipe, and modifying 4 existing catch basins. An oil water separator is needed because one of the structures that needs to be replaced to make this configuration work is an oil/water separator in the existing condition. Detailed runoff calculation results are included in Attachment B.

Capital Cost

The preliminary construction cost for this alternative is $315,000. See Attachment C for a complete cost breakdown.

O&M Costs

O&M costs will decrease from the existing configuration since current emergency operational pumping out of Pond D will not be required. All catch basins and pipes will continue to be routinely cleaned and checked for clogging and damage. There are no additional maintenance activities that will need to occur for stormwater infrastructure.

Schedule and Operational Disruptions

The work required to complete the gravity alternative will take approximately 8 weeks if completed during regular working hours. Should nighttime and off hour work be preferred to minimize disruption, construction will likely take longer and cost more, but will reduce the amount of impact to traffic flows and operations.

Regulatory Approvals

A site development activity permit (SDAP) with abbreviated drainage review will be required from the City of Bremerton before work can commence. The SDAP is triggered by grading more than 100 CY. Pond B excavation will be approximately 500 CY. A SDAP submission includes a site plan, drainage report and fees.

The abbreviated drainage review portion of the SDAP will require a stormwater plan and report that shows compliance with minimum requirements #1-5 of the Stormwater Management Manual for Western Washington. There should be no reason the site will not be able to meet these 5 requirements. However, a Stormwater Pollution Prevention Plan (SWPPP) will need to be prepared.

PUMP ALTERNATIVE

The goal of the pump alternative is to leave the existing conveyance network as-is and place a permanent lift station in Pond D as shown in Figure 5. The proposed pump would transfer runoff from Pond D to either Pond B or Pond C during large storm events. Ponds B and C have excess capacity and would serve as the overflow ponds for Pond D.

The basic specifications of the pump system are outlined below in Table 5. The pump would need to be optimized if this alternative is advanced; however, the pump could turn on when the water in Pond D reaches an elevation of 314.5 ft and drain the pond until emptied.

Table 5. Pump Specifications

Pumping Rate	2.28 cfs
Elevation at top of Pond D	316.5 ft
Elevation at bottom of Pond D	312.5 ft
Force Main Discharge Elevation	324.0 ft (max)
Distance from Pump to Discharge	110 ft (max)

A preliminary design for the stormwater pump has been prepared through consultation with Romtec Pumping Systems (Romtec). Attachment D contains a preliminary design for the pump by Romtec. The pump itself costs approximately $140,000.

Capital Cost

The preliminary construction cost for this alternative is $487,000. See Attachment C for a complete cost breakdown.

O&M Costs

O&M costs will decrease from the existing configuration since current emergency operational pumping out of Pond D will not be required; however, costs will increase slightly in comparison to the gravity alternative. The pump station needs to be inspected every 6 months for signs of wear and deterioration. The service life of the pump will be extended by replacing the oil annually and replacing seals and gaskets as necessary. In total, annual O&M is estimated to be somewhere between $1,000-$2,000. The pump is expected to last at least 20 years with proper maintenance and replacement costs can be annualized in consideration of O&M costs. At time of replacement, the pump itself will need to be replaced, but the conveyance infrastructure should not need to be changed.

Schedule and Operational Disruptions

The work required to complete the pump alternative will take approximately 4 weeks if completed during regular working hours. Should nighttime and off hour work be preferred to minimize disruption, construction will likely take longer and cost more. Traffic control requirements will be reduced due to the location of the asphalt restoration. Most work can be completed without disrupting normal transfer station operations, unless there is a connection to Pond B.

Regulatory Approvals

A commercial site plan review will be required from the City of Bremerton before work can commence. The site plan review requires submission of a plan set and payment of fees to the City of Bremerton. It is likely a very brief review process.

CONTAMINATION

Contamination may have contributed to the low infiltration rate being experienced in Pond D. Prevention and separation of water that comes in contact with waste (leachate) is necessary for both alternative options to avoid the potential fouling of the other ponds. As this project progresses it is critical to consider how best to keep all ponds clean.

CONCLUSION

The two alternatives presented in this memorandum are viable solutions to the stormwater problem at OVTS. The gravity approach will be less expensive to install and maintain but will cause greater construction disruption to the daily operations of the facility. This option provides an excess storage capacity of 42,718 cf that can be consumed for future improvements to the site that may impact available storage capacity. The pump alternative is more expensive to install and maintain; however, it will require much less interruption to the facility and can provide additional management flexibility between ponds. Contamination will need to be addressed regardless of which alternative is chosen. Both alternatives will improve the existing stormwater conditions and prevent Pond D from overflowing offsite.

Attachment A

Figures

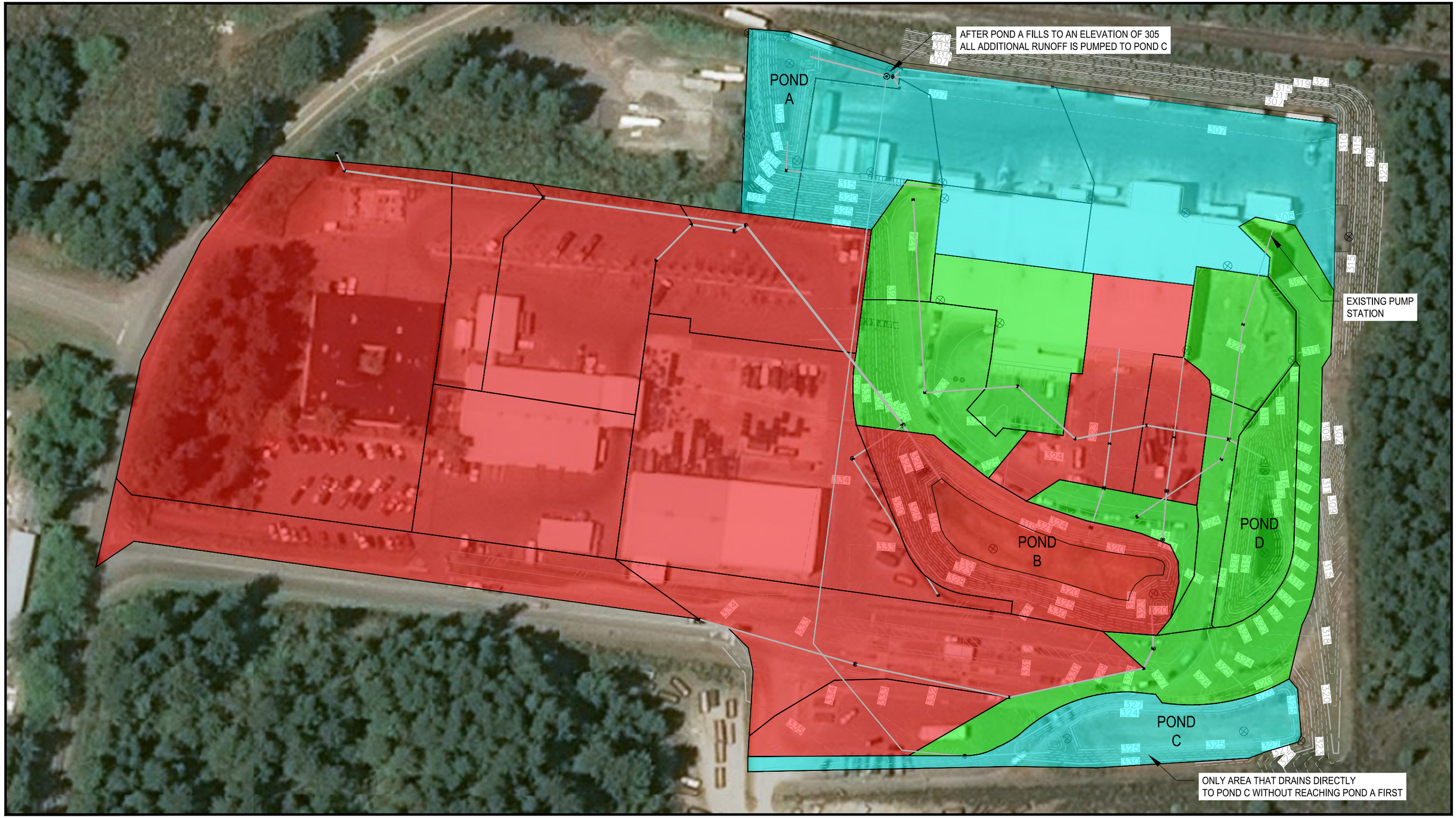

Parametrix DATE: September 23, 2020 FILE: XPS1578151-SD-DE

N

0 100

1 INCH = 100 FT.

POND A & C BASIN = 3.34 AC
POND B BASIN = 11.16 AC
POND D BASIN = 3.25 AC
TOTAL = 17.75 AC

Figure 1
EXISTING DRAINAGE SUBBASINS

Parametrix DATE: July 23, 2020 FILE: XPS1578151-SD-DE

N

0 100

1 INCH = 100 FT.

Figure 2

EXISTING STORMWATER MANAGEMENT INFRASTRUCTURE

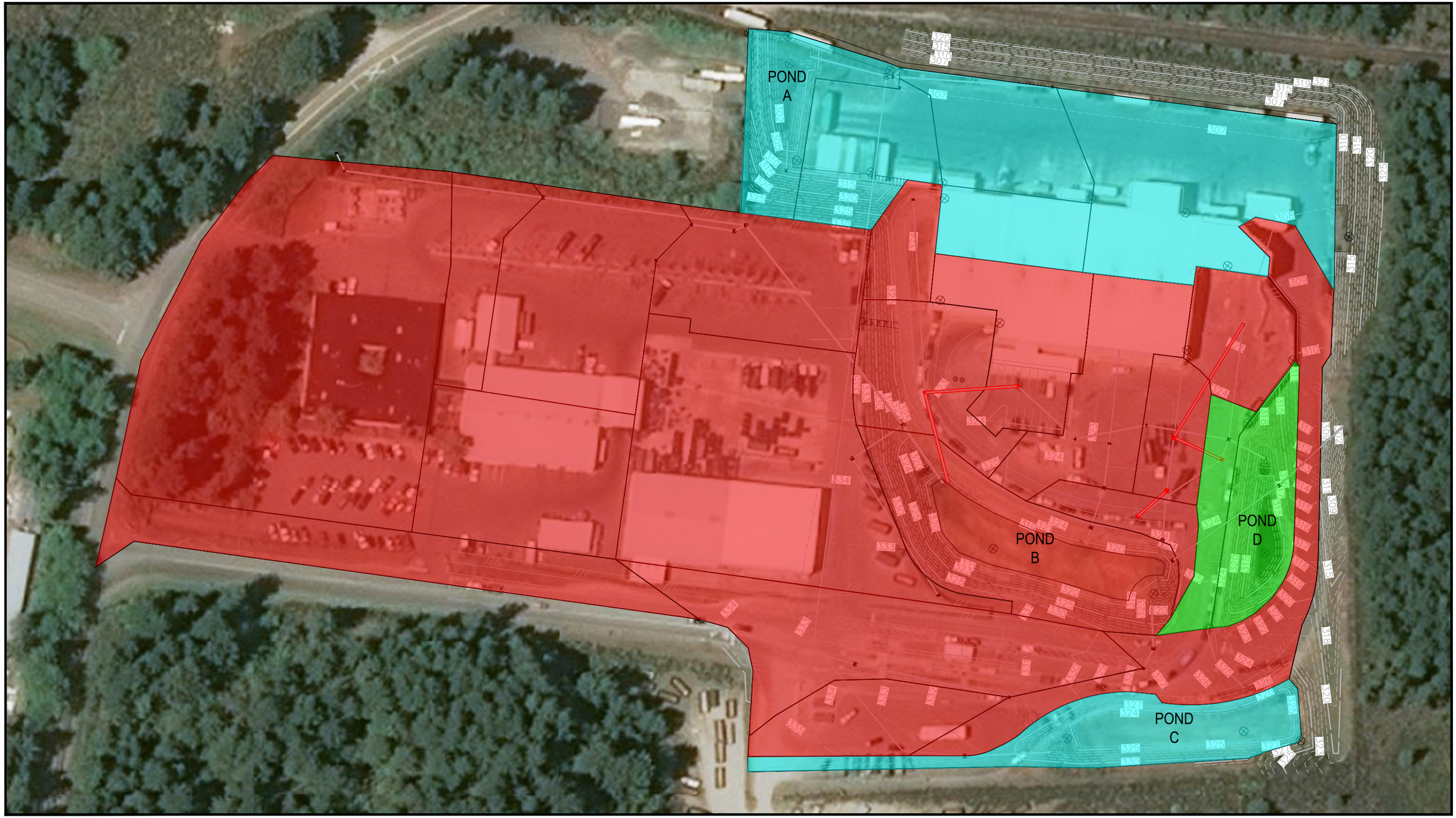

Parametrix DATE: July 27, 2020 FILE: XPS1578151-SD-DE

N

0 100

1 INCH = 100 FT.

PONDS A & C BASIN = 3.34 AC
POND B BASIN = 13.81 AC
POND D BASIN = 0.60 AC
TOTAL = 17.75 AC

Figure 3
GRAVITY ALTERNATIVE SUBBASINS

Parametrix DATE: August 26, 2020 FILE: XPS1578151-SD-DE

N

0 100

1 INCH = 100 FT.

Figure 4

GRAVITY ALTERNATIVE

Parametrix DATE: August 26, 2020 FILE: XPS1578151-SD-DE

0 N 50
1 INCH = 50 FT.

Figure 5
PUMP ALTERNATIVE

Attachment B

Stormwater Calculations

Existing Condition

Pond	A + C	B	D	Total
Impervious AC	2.56	10.60	2.85	16.01
Pervious AC	0.78	0.56	0.40	1.74
Total	3.34	11.16	3.25	17.75
Runoff (100 yr)	73,320	258,679	73,747	405,746

Proposed Gravity Alternative

Pond	A + C	B	D	Total
Impervious AC	2.56	13.25	0.2	16.01
Pervious AC	0.78	0.56	0.4	1.74
Total	3.34	13.81	0.60	17.75
Runoff (100 yr)	73,320	320,993	11,432	405,745

Entire Area			
100 Year	23.51 cfs	8.13 hr	405814 cf
2.65 AC Imp			62316

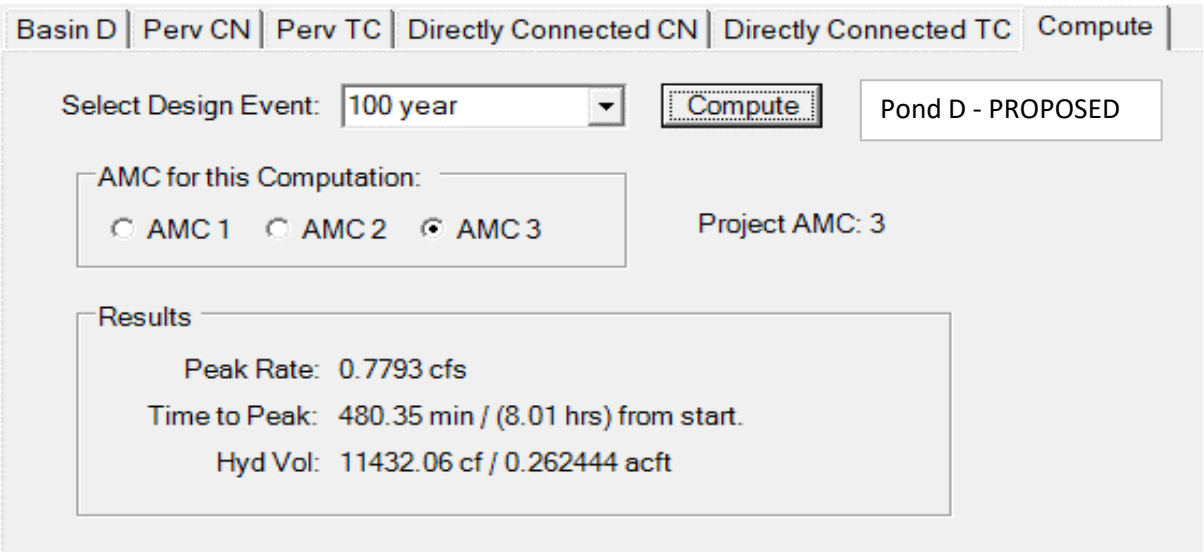

Basins

Basin B | Perv CN | Perv TC | Directly Connected CN | Directly Connected TC | Compute

Select Design Event: 100 year

Compute

Pond B - EXISTING

AMC for this Computation:

AMC 1 AMC 2 AMC 3

Project AMC: 3

Results

Peak Rate: 11.0737 cfs

Time to Peak: 519.68 min / (8.66 hrs) from start.

Hyd Vol: 258678.77 cf / 5.938447 acft

Basin A | Perv CN | Perv TC | Directly Connected CN | Directly Connected TC | Compute

Select Design Event: 100 year

Com

Ponds A + C - EXISTING and PROPOSED

AMC for this Computation:

AMC 1 AMC 2 AMC 3

Project AMC: 3

Results

Peak Rate: 4.2974 cfs

Time to Peak: 488.07 min / (8.13 hrs) from start.

Hyd Vol: 73320.10 cf / 1.683198 acft

Basin B | Perv CN | Perv TC | Directly Connected CN | Directly Connected TC | Compute

Select Design Event: 100 year

Compute

Pond B - PROPOSED

AMC for this Computation:

AMC 1 AMC 2 AMC 3

Project AMC: 3

Results

Peak Rate: 13.745 cfs

Time to Peak: 519.68 min / (8.66 hrs) from start.

Hyd Vol: 320993.29 cf / 7.368992 acft

Basin D | Perv CN | Perv TC | Directly Connected CN | Directly Connected TC | Compute

Select Design Event: 100 year

Compute

Pond D EXISTING

AMC for this Computation:

AMC 1 AMC 2 AMC 3

Project AMC: 3

Results

Peak Rate: 4.8206 cfs

Time to Peak: 480.35 min / (8.01 hrs) from start.

Hyd Vol: 73746.83 cf / 1.692994 acft

Table 1. Existing Basin Runoff and Pond Response During 100-yr Storm

Pond	Contributing Area (ac)	Infiltration Rate (in/hr)	Total Runoff Volume (cf)	Volume Infiltrated (cf)	Volume Detained (cf)	Overflow Volume (cf)	Resulting Pond Depth (ft)
A	3.34	0	73,320	0	12312 (Pump On)	0	3.5
C		5		52,230	8,778	0	1.0
B	11.16	11	258,679	221,219	37,460	0	2.3
D	3.25	0	73,747	0	13,774	59,973	4.0
Total	17.75		405,746	273,449	60,012	59,973	

Table 3. Proposed Gravity Alternative Runoff and Pond Response During 100-yr Storm

Pond	Contributing Area (ac)	Infiltration Rate (in/hr)	Total Runoff Volume (cf)	Volume Infiltrated (cf)	Volume Detained (cf)	Overflow Volume (cf)	Resulting Pond Depth (ft)
A	3.34	0	73,320	0	12312 (Pump On)	0	3.5
C		5		52,230	8,778	0	1.0
B	13.81	11	320,993	257,758	63,235	0	3.9
D	0.6	0	11,432	0	11,432	0	3.5
Total	17.75		405,745	309,988	83,445	0	`

Table 2. Existing Pond Storage Capacity

Pond	Maximum Available Pond Depth (ft)	Total Storage Capacity (cf)	Capacity Used during 100-yr Storm (cf)	Remaining Available Capacity (cf)
A	3.5	12,312	12,312	0
C	2.5	26,299	8,778	17,521
B	4	72,884	37,460	35,424
D	4	13,774	13,774	0
Total		125,268	72,324	52,945

Table 4. Proposed Gravity Alternative Storage Capacity

Pond	Maximum Available Pond Depth (ft)	Total Storage Capacity (cf)	Capacity Used during 100-yr Storm (cf)	Remaining Available Capacity (cf)
A	3.5	12,312	12,312	0
C	2.5	26,299	8,778	17,521
B	5	86,091	63,235	22,856
D	4	13,774	11,432	2,342
Total		138,475	95,757	42,718

Pond A				
Elevation	**Stage Storage**	**Area (sq.ft.)**	**Volume (cu.ft.)**	
301.5	0	1993	0	POND BOTTOM
302	0.5	2397	1098	
303	1.5	3255	3924	
304	2.5	4178	7640	
305	3.5	5166	12312	PUMP ON @ 305
305.4	3.9	5580	14461	100-YEAR EVENT
306	4.5	6220	18005	
306.7	5.2	6997	22631	
307	5.5	7340	24782	OVERFLOW

Runoff Volume (from StormShed)			
	Q (cfs)	**Time (hr)**	**Volume (cf)**
100 YR			73,320

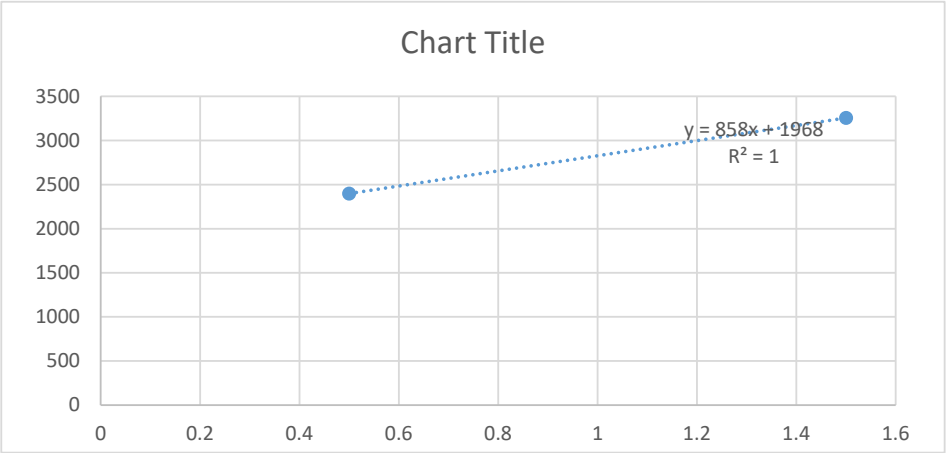

Pond B					
Elevation	**Datum Elevation**	**Stage Storage**	**Area (sq.ft.)**	**Volume (cu.ft.)**	
319	95	0	14161	0.0	EXISTING POND BOTTOM
320	96	1	16134	15147.5	
321	97	2	18172	32300.5	
322	98	3	20275	51524.0	
323	99	4	22444	72883.5	OVERFLOW
324	100	5	24678	96444.5	
325.5	101.5	6.5	**28151**	136066.3	TOP OF POND

Existing Runoff Volume (from StormShed)				
	Peak Rate	**Time to Peak**	**Volume (cf)**	**Volume (ac-ft)**
100 YR Storm	11.68	8.66	258,679	5.94
Existing Detention Volume (11 in/hr infiltration rate)				
	Volume (cf)	**Volume (ac-ft)**	**Pond Depth**	**Infiltrated (cf)**
100 YR Storm	37,460	0.86	2.28	221,219
				258,679

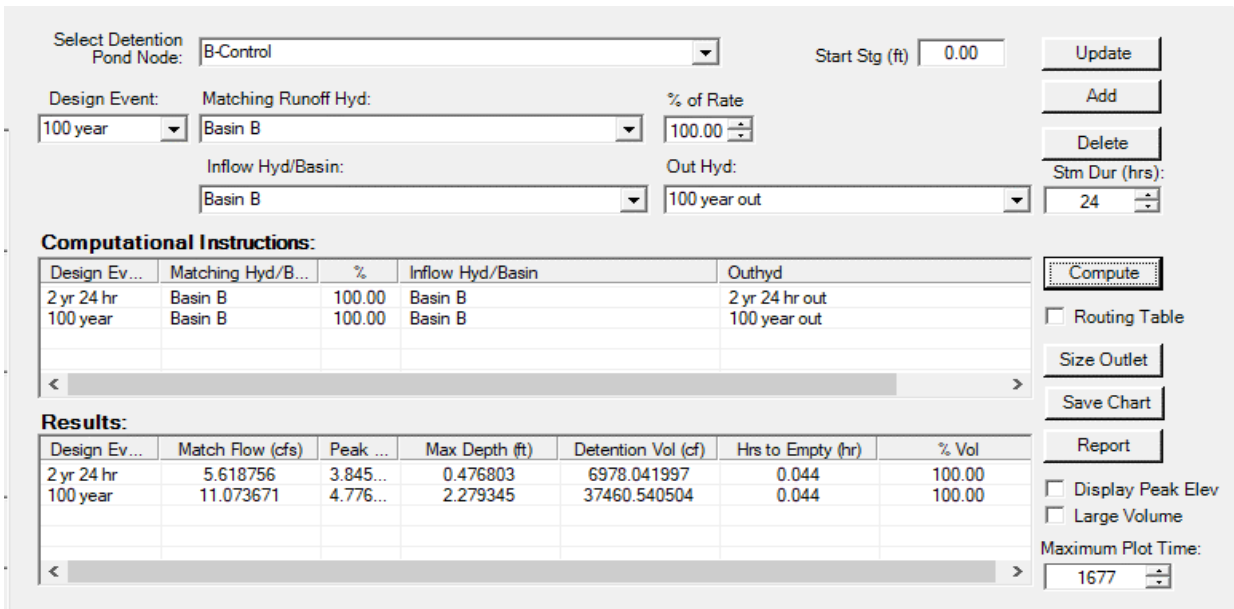

Pond B					
Elevation	**Datum Elevation**	**Stage Storage**	**Area (sq.ft.)**	**Volume (cu.ft.)**	
318	94	0	12253	0	NEW POND BOTTOM
319	95	1	14161	13207.0	
320	96	2	16134	28354.5	
321	97	3	18172	45507.5	
322	98	4	20275	64731.0	
323	99	5	22444	86090.5	OVERFLOW
324	100	6	24678	109651.5	
325.5	101.5	6.5	28151	149273.3	TOP OF POND

Proposed Runoff Volume (from StormShed)				
	Peak Rate	**Time to Peak**	**Volume (cf)**	**Volume (ac-ft)**
100 YR Storm	13.75	8.66	320,993	7.37
Proposed Detention Volume (11 in/hr infiltration rate)				
	Volume (cf)	**Volume (ac-ft)**	**Pond Depth**	**Infiltrated (cf)**
100 YR Storm	63,235	1.45	3.93	257,758
				320,993

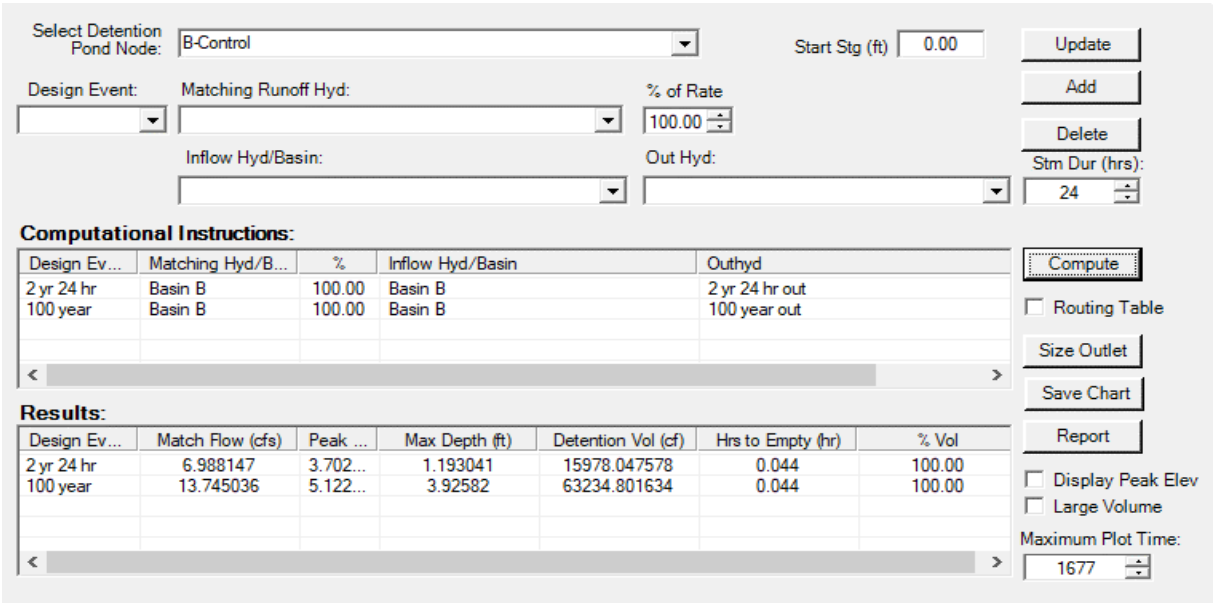

Pond C				
Elevation	**Stage Storage**	**Area (sq.ft.)**	**Volume (cu.ft.)**	
324	0	8393	0	POND BOTTOM
325	1	10070	9232	
326	2	11809	20171	
326.5	2.5	12703	26299	OVERFLOW

Runoff Volume (from StormShed)				
	Peak Rate	**Time to Peak**	**Volume (cf)**	**Volume (ac-ft)**
100 YR Storm	3.67	8.01	61,008	1.40
Detention Volume (5 in/hr infiltration rate)				
	Volume (cf)	**Volume (ac-ft)**	**Pond Depth**	**Infiltrated (cf)**
100 YR Storm	8,778	0.20	0.95	52,230
	10927.2			

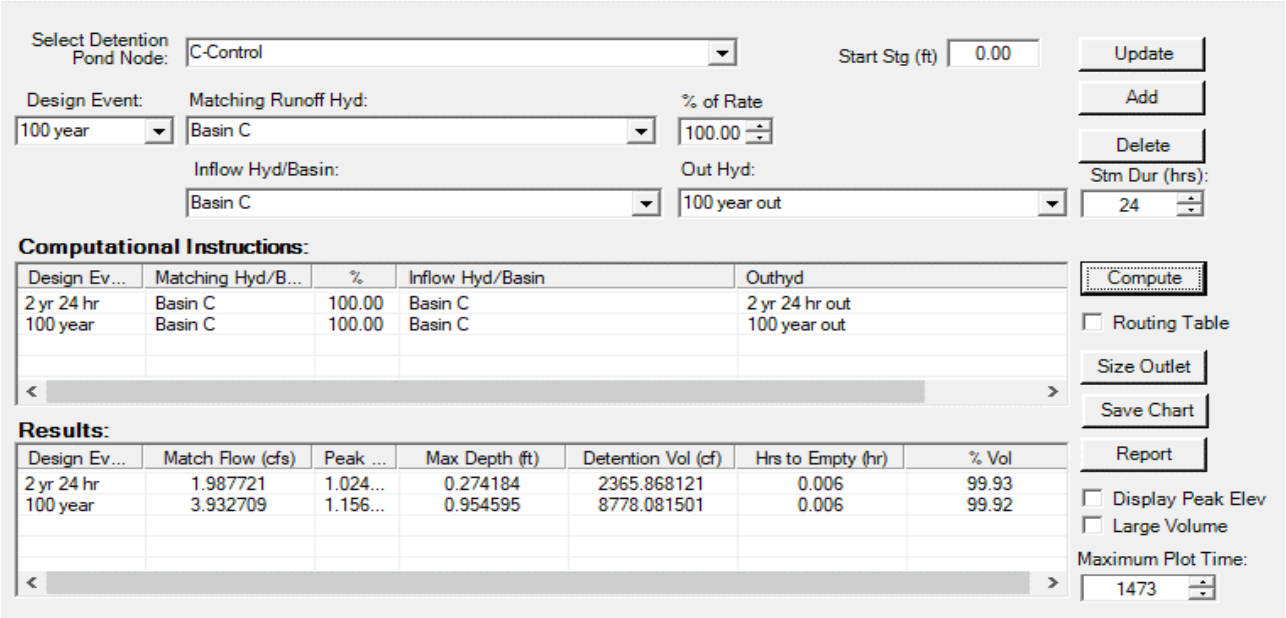

Pond D					
Elevation	**Datum Elevation**	**Stage Storage**	**Area (sq.ft.)**	**Volume (cu.ft.)**	
312.5	91.5	0	1802	0	POND BOTTOM
313	92	0.5	2183	1,865	
314	93	1.5	3009	4,526	
315	94	2.5	3920	8,061	
316	95	3.5	4917	12,555	
316.2	95.2	3.7	5127	12,727	
316.5	95.5	4	5447	13,774	OVERFLOW
317	96	4.5	6000	15,518	
317.5	96.5	5.0	6573	17,262	TOP OF POND

4

Existing Runoff Volume (from StormShed)				
	Peak Rate	**Time to Peak**	**Volume (cf)**	**Volume (ac-ft)**
2 YR Storm	1.87	8.31	36,519	0.84
100 YR Storm	3.71	8.31	73,747	1.69
Detention Volume (from StormShed) for Proposed Condition				
	Volume (cf)	**Volume (ac-ft)**	**Pond Depth**	**Infiltrated (cf)**
100 YR Storm	11,432	0.26	3.5	-

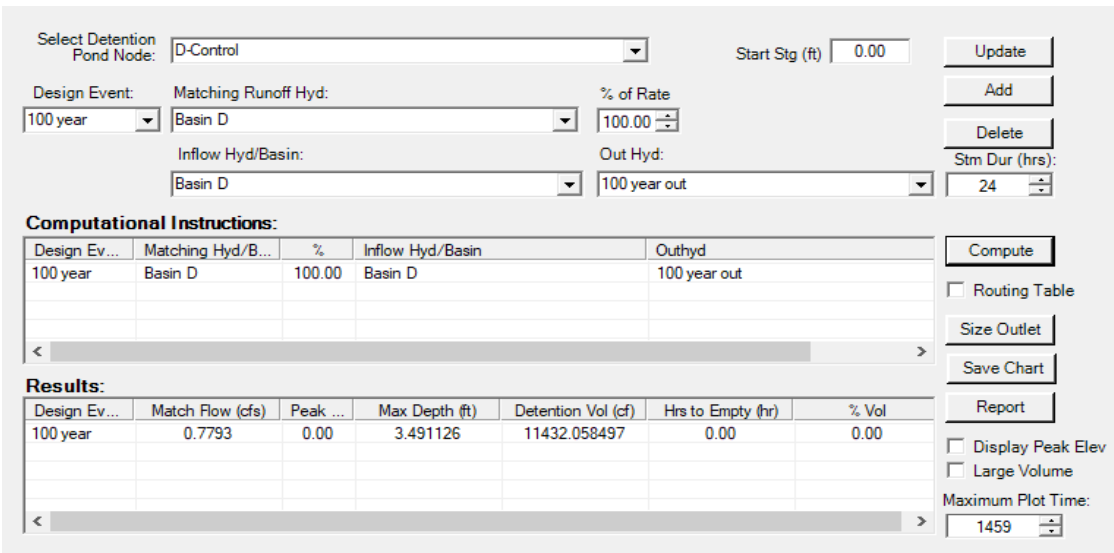

Attachment C

Cost Estimates

PROJECT NAME: Olympic View Transfer Station
PROJECT DESCRIPTION: Bremerton, WA
PREPARED BY: R. Sayles
DATE: 8/28/2020

Gravity Alternative

NO.	COST CODE	COST CODE W/ SCH	ITEM	QTY	UNIT	UNIT COST	AMOUNT
1	01-07-0010KC	-01-07-0010KC	PROTECTION & SUPPORT OF EXISTING UTILITIES	1	L.S.	$5,000.00	$5,000.00
2	01-08-7003	-01-08-7003	TYPE B PROGRESS SCHEDULE	1	L.S.	$5,000.00	$5,000.00
3	01-09-0001	-01-09-0001	MOBILIZATION	1	L.S.	$22,015.23	$22,015.23
4	01-09-7715KC	-01-09-7715KC	FORCE ACCOUNT POT-HOLE UTILITY CROSSING	1	EST.	$10,000.00	$10,000.00
5	01-10-6971	-01-10-6971	PROJECT TEMPORARY TRAFFIC CONTROL	1	L.S.	$50,000.00	$50,000.00
6	02-01-9000KC	-02-01-9000KC	TEMPORARY CONSTRUCTION ACCESS AND STAGING	1	L.S.	$25,000.00	$25,000.00
7	02-02	-02-02	REMOVING STORM PIPE (6"-12")	215	L.F.	$15.00	$3,225.00
8	02-02-0049	-02-02-0049	REMOVING DRAINAGE STRUCTURE	4	EACH	$550.00	$2,200.00
9	02-02-0079KC	-02-02-0079KC	SAW CUT ASPHALT CONCRETE PAVEMENT	1154	L.F.	$3.00	$3,462.00
10	02-02-0120	-02-02-0120	REMOVING ASPHALT CONC. PAVEMENT	256	S.Y.	$10.00	$2,564.44
11	02-03-0350	-02-03-0350	UNSUITABLE FOUNDATION EXCAVATION INCL. HAUL	341	C.Y.	$20.00	$6,821.42
12	02-03-1040	-02-03-1040	CHANNEL EXCAVATION INCL. HAUL	490	C.Y.	$20.00	$9,800.00
13	02-12-7530	-02-12-7530	CONSTRUCTION GEOTEXTILE FOR SEPARATION	10	S.Y.	$5.00	$50.00
14	04-04-0650	-04-04-0650	CRUSHED SURFACING BASE COURSE IN STOCKPILE (TON)	175	TON	$30.00	$5,251.85
15	04-04-0670	-04-04-0670	CRUSHED SURFACING TOP COURSE IN STOCKPILE (TON)	88	TON	$35.00	$3,063.58
16	05-04-5767KC	-05-04-5767KC	HMA CL. 1/2 IN. PG 64-22	58	TON	$100.00	$5,782.82
17	07-04-3250KC	-07-04-3250KC	DUCTILE IRON STORM SEWER PIPE 10 IN. DIAM.	248	L.F.	$70.00	$17,360.00
18	07-04-3251KC	-07-04-3251KC	DUCTILE IRON STORM SEWER PIPE 12 IN. DIAM.	103	L.F.	$80.00	$8,240.00
19	07-04-3253KC	-07-04-3253KC	DUCTILE IRON STORM SEWER PIPE 18 IN. DIAM.	226	L.F.	$100.00	$22,600.00
20	07-05-3091	-07-05-3091	CATCH BASIN TYPE 1	2	EACH	$1,500.00	$3,000.00
21	07-05-3105	-07-05-3105	CATCH BASIN TYPE 2 48 IN. DIAM.	1	EACH	$3,000.00	$3,000.00
22	07-05-3105	-07-05-3105	CATCH BASIN TYPE 2 48 IN. DIAM.	1	EACH	$5,000.00	$5,000.00
23	07-05-9605	-07-05-9605	CONNECTION TO DRAINAGE STRUCTURE	4	EACH	$2,000.00	$8,000.00
24	07-08-7013	-07-08-7013	GRAVEL BACKFILL FOR PIPE ZONE BEDDING	104	TON	$30.00	$3,131.19
25	07-08-7029	-07-08-7029	PLUGGING EXISTING PIPE	3	EACH	$500.00	$1,500.00
26	08-01-6488	-08-01-6488	EROSION CONTROL AND WATER POLLUTION PREVENTION	1	L.S.	$10,000.00	$10,000.00
27	08-15-1086	-08-15-1086	QUARRY SPALLS (TON)	20	TON	$55.00	$1,100.00
						SUBTOTAL	$242,168
						30% CONTINGENCY	$72,650
						TOTAL COST	**$314,818**

No. of Items	DATE PREPARED:	8/28/2020	PREPARED BY:	R.Sayles
27	DATE REVIEWED:	11/16/2020	REVIEWED BY:	D.Norton

PROJECT NAME: Olympic View Transfer Station
PROJECT DESCRIPTION: Bremerton, WA
PREPARED BY: R. Sayles
DATE: 8/28/2020

Pump Alternative

NO.	COST CODE	COST CODE W/ SCH	ITEM	QTY	UNIT	UNIT COST	AMOUNT
1	01-08-7003	-01-08-7003	TYPE B PROGRESS SCHEDULE	1	L.S.	$5,000.00	$5,000.00
2	01-09-0001	-01-09-0001	MOBILIZATION	1	L.S.	$34,024.53	$34,024.53
3	01-09-7715KC	-01-09-7715KC	FORCE ACCOUNT POT-HOLE UTILITY CROSSING	1	EST.	$2,000.00	$2,000.00
4	01-10-6971	-01-10-6971	PROJECT TEMPORARY TRAFFIC CONTROL	1	L.S.	$10,000.00	$10,000.00
5	02-01-9000KC	-02-01-9000KC	TEMPORARY CONSTRUCTION ACCESS AND STAGING	1	L.S.	$5,000.00	$5,000.00
6	02-02-0079KC	-02-02-0079KC	SAW CUT ASPHALT CONCRETE PAVEMENT	294	L.F.	$3.00	$882.00
7	02-02-0120	-02-02-0120	REMOVING ASPHALT CONC. PAVEMENT	65	S.Y.	$10.00	$653.33
8	02-03-0350	-02-03-0350	UNSUITABLE FOUNDATION EXCAVATION INCL. HAUL	147	C.Y.	$20.00	$2,948.17
9	02-12-7530	-02-12-7530	CONSTRUCTION GEOTEXTILE FOR SEPARATION	20	S.Y.	$5.00	$100.00
10	04-04-0650	-04-04-0650	CRUSHED SURFACING BASE COURSE IN STOCKPILE (TON)	45	TON	$30.00	$1,337.99
11	04-04-0670	-04-04-0670	CRUSHED SURFACING TOP COURSE IN STOCKPILE (TON)	22	TON	$35.00	$780.50
12	05-04-5767KC	-05-04-5767KC	HMA CL. 1/2 IN. PG 64-22	15	TON	$100.00	$1,486.66
13	07-04-3251KC	-07-04-3251KC	DUCTILE IRON STORM SEWER PIPE 12 IN. DIAM.	250	L.F.	$80.00	$20,000.00
14	07-05-3091	-07-05-3091	CATCH BASIN TYPE 1	1	EACH	$1,500.00	$1,500.00
15		-	ROMTEC UTILITIES PUMP STATION	1	EACH	$250,000.00	$250,000.00
16	07-08-7013	-07-08-7013	GRAVEL BACKFILL FOR PIPE ZONE BEDDING	45	TON	$30.00	$1,356.67
17	08-01-6488	-08-01-6488	EROSION CONTROL AND WATER POLLUTION PREVENTION	1	L.S.	$5,000.00	$5,000.00
18		-	ELECTRICAL	1	L.S.	$30,000.00	$30,000.00
19	08-15-1086	-08-15-1086	QUARRY SPALLS (TON)	40	TON	$55.00	$2,200.00
						SUBTOTAL	$374,270
						30% CONTINGENCY	$112,281
						TOTAL COST	**$486,551**

No. of Items	DATE PREPARED:	8/28/2020	PREPARED BY:	R.Sayles
19	DATE REVIEWED:	11/16/2020	REVIEWED BY:	D.Norton

Attachment D

Romtec Preliminary Design

PROJECT INFO	
Job Name:	**North Pond**
Company:	**Parametrix**
Contact:	**Rhiannon Sayles**
Job Type:	**New Station**
Water Type/Source:	**Stormwater**
Import/Domestic:	**Import Acceptable**

ROMTEC UTILITIES

PACKAGE/STARTUP	
Offering:	**Complete System**
Mechanical:	**All by Romtec Utilities**
Pumps:	**By Romtec Utilities**
Control Panel:	**By Romtec Utilities**
Generator:	**N/A**
Advisor/Startup:	**Mechanical & Electrical**
Turnkey:	**No**

DESIGN CRITERIA - SWC6D-00-D0075-500x20-6D-43-0

FLOW RATE

Peak Inflow:	**1025**	GPM
Pumping Rate:	**512.5**	GPM (of single pump)
Static Head:	**13.0**	Feet
TDH:	**17.5**	Feet
TDH Calcs:	**RU Calcs**	

ACTIVE VOLUME

Max Pump Starts:	**10.00**	Starts/Hr
Cycle Time:	**6.00**	Minutes
Active Volume:	**768.75**	Gallons
Active Volume:	**102.77**	Cu Feet
Well Shape:	**Round**	
Well Diameter:	**6**	Feet
Well Dimensions:	**N/A**	**N/A**
Cross-Section Area:	**28.27**	Sq Feet
Min. Depth Required:	**0.80**	Feet
Active Depth:	**0.90**	Feet

STORAGE VOLUME (if required)

Time:		Minutes
Flow Rate:		GPM
Volume:	**0.00**	Gallons
Volume:	**0.00**	Cu. Feet
Min. Depth Required:	**0.00**	Feet
Storage Depth:		Feet

ON-SITE POWER

Power:	**480V / 3-Phase**

FORCE MAIN

FM Info:	**New**	**Single FM**	
Length:	**110**	Feet	
FM Discharge:	**324.00**	Feet	
FM High Point:	**324.00**	Feet	
	(1)	*(2)*	*(3)*
Nominal ID:	**8"**		
Type/Rating:	**ASSUMED PVC C900 DR18**		

INFLUENT PIPING

	(1)	*(2)*	*(3)*
Influent Invert:	**312**		
Influent Size:			
Type:			

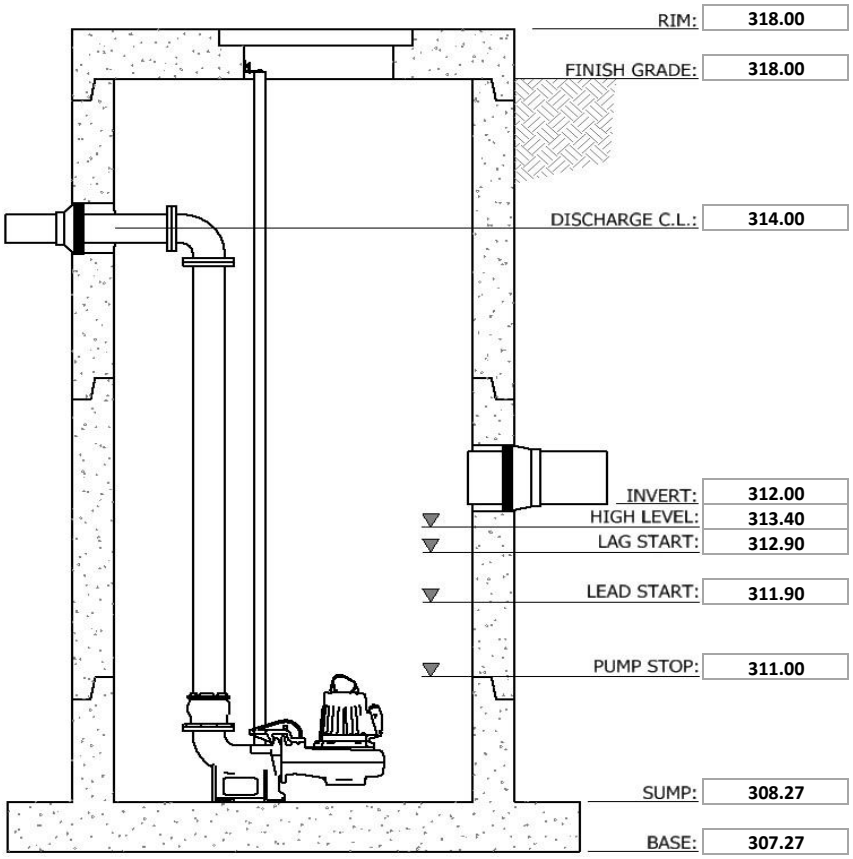

Note: Image is a preliminary representation of the pumping system.
Elevations shown are the primary factors used for sizing the wet well.
Backup levels not shown. Additional (or fewer) level settings may be required.

General Specification

A. The package pump station supplier of the sewer lift station shall be Romtec Utilities. The package pump station supplier shall design and draw the complete lift station including the wet well structure and associated piping and valves along with the control panel and the associated schematics.

B. The package pump station supplier shall be solely responsible for proper prefabrication, integration, supply, performance, and warranty of all package pump station components delineated in this specification and on the drawings, which shall be used as a guide of the minimum product specifications that shall be met.

C. The package pump station supplier work shall include designing and supplying the piping, mechanical, and appurtenances within and adjacent to the wet well as a complete, predesigned, packaged pump station as described herein.

D. The drawings shall be of sufficient detail for the Engineer to review for conformity to the contract. All drawings shall include elevations on the same datum point as in the contract plans.

E. Romtec Utilities will manufacture and deliver the pump station as described below to the job site for the contractor. A representative of Romtec Utilities will be present the day of the underground installation.

F. The package pump station supplier is responsible for overseeing all start-up, testing and training procedures.

Customer :
Reference :

Pump Performance Datasheet

Ebara Quotation System 20.3.2

Item number	: 001	Product Description	: 100DLKFU65.5
Service	:	Stages	: 1
Quantity	: 1	Based on curve number	: DLMK-C614-9203
Quote number	: 750542	Date last saved	: 26 Aug 2020 4:56 PM

Operating Conditions		**Liquid**	
Flow, rated	: 512.5 USgpm	Liquid type	: Water
Differential head / pressure, rated (requested)	: 17.50 ft	Additional liquid description	:
Differential head / pressure, rated (actual)	: 17.49 ft	Solids diameter, max	: 0.00 in
Suction pressure, rated / max	: 0.00 / 0.00 psi.g	Solids concentration, by volume	: 0.00 %
NPSH available, rated	: Ample	Temperature, max	: 68.00 deg F
Site Supply Frequency	: 60 Hz	Fluid density, rated / max	: 1.00 / 1.00 SG
Performance		Viscosity, rated	: 1.00 cP
Speed criteria	: Synchronous	Vapor pressure, rated	: 0.00 psi.a
Speed, rated	: 1745 rpm	**Material**	
Impeller diameter, rated	: 8.15 / 3.66 in	Material selected	: Standard
Impeller diameter, maximum	: 8.54 / 4.05 in	**Pressure Data**	
Impeller diameter, minimum	: 8.03 / 3.54 in	Maximum working pressure	: 12.58 psi.g
Efficiency	: 50.09 %	Maximum allowable working pressure	: N/A
NPSH required / margin required	: - / 0.00 ft	Maximum allowable suction pressure	: N/A
Ns (imp. eye flow) / Nss (imp. eye flow)	: 4,110 / - US Units	Hydrostatic test pressure	: N/A
MCSF	: 112.4 USgpm	**Driver & Power Data (@Max density)**	
Head, maximum, rated diameter	: 29.06 ft	Driver sizing specification	: Rated power
Head rise to shutoff	: 66.21 %	Margin over specification	: 0.00 %
Flow, best eff. point	: 518.6 USgpm	Service factor	: 1.00
Flow ratio, rated / BEP	: 98.83 %	Power, hydraulic	: 2.26 hp
Diameter ratio (rated / max)	: 93.81 %	Power, rated	: 4.52 hp
Head ratio (rated dia / max dia)	: 74.41 %	Power, maximum, rated diameter	: 4.70 hp
Cq/Ch/Ce/Cn [ANSI/HI 9.6.7-2010]	: 1.00 / 1.00 / 1.00 / 1.00	Minimum recommended motor rating	: 7.50 hp / 5.59 kW (Fixed)
Selection status	: Acceptable		

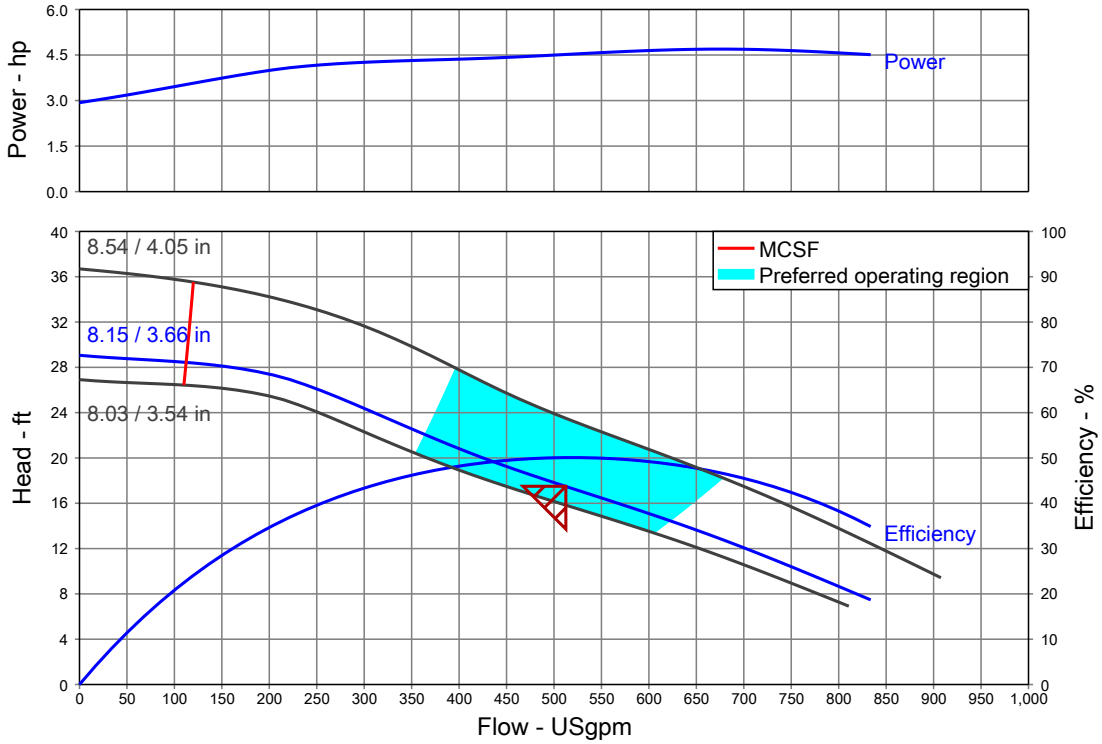

ROMTEC UTILITIES INC
18240 NORTH BANK RD, ROSEBURG, OR 97470 USA
Tel: 541-496-3541 Fax: 541-496-0801 romtecutilities.com

Attachment E

Planning Level Opinions of Probable Cost

DRAFT

Project:	OVTS Facility Master Plan	Date:	1-Dec-20
Estimate Basis:	Planning Level, Order of Magnitude for Second Outbound Scale	Costs:	2020 Dollars
Location:	Kitsap County, Washington	Prepared By:	I Sutton, Parametrix

DETAILED CAPITAL COST ESTIMATE

I. GENERAL

Item	Quantity	Units	Unit Price	Item Cost	Total
General Conditions Allowance	1	LS	LS	$10,000	
Construction Phasing Allowance	1	LS	LS	$5,000	
Work Setout and Survey	1	LS	LS	$2,000	
Mobilization/Demobilization	1	LS	LS	$5,000	
Trench Safety	1	LS	LS	$2,000	
Traffic Control	1	LS	LS	$2,000	
Overhead and Profit 12% of Direct Construction Cost Below	1	LS	LS	$40,000	
Subtotal I					**$66,000**

II. SITEWORK

Item	Quantity	Units	Unit Price	Item Cost	Total
Temporary Erosion and Sediment Control Measures	1	LS	LS	$5,000	
Saw Cut Pavement	265	LF	$4.00	$1,060	
Earthwork					
Clear and Grub	0.2	Acres	$15,000.00	$3,000	
Strip/Stockpile Topsoil	200	CY	$4.00	$800	
Common Excavation/Fill	200	CY	$8.00	$1,600	
Common Borrow	1500	CY	$25.00	$37,500	
Finishing Grading	0.2	Acres	$8,000.00	$1,600	
Subgrade Preparation	270	SY	$2.00	$540	
Geotextile Separation Fabric for Pavements	100	SY	$3.00	$300	
Gravel Base (9" thick)	100	Tons	$30.00	$3,000	
Asphalt Pavement, Parking (5" thick new)	100	Tons	$90.00	$9,000	
Site Utilities					
Fiber Allowance	50	LF	$50.00	$2,500	
Electrical	50	LF	$90.00	$4,500	
Site Drainage					
Collection system	1	LS	LS	$50,000	
Vehicle Guardrail	700	LF	$50.00	$35,000	
Fencing and Gates					
6 Foot chainlink vinyl coated w/ 2 Personnel Gates	100	LF	$18.00	$1,800	
Pavement Striping	1	LS	LS	$5,000	
Site Lighting					
Conduit and Cable	50	LF	$9.50	$475	
Concrete Base	1	EA	$380.00	$380	
Standard and Luminaire	1	EA	$3,000.00	$3,000	
Site Signage	3	EA	$300.00	$900	
Landscaping					
Topsoil	200	CY	$35.00	$7,000	
Seeding/Mulch/Fertilizer	0.1	Acres	$8,000.00	$800	
80' Scale with Foundation and Equipment	1	LS	LS	$200,000	
Subtotal II					**$374,755**

TOTAL w/o CONTINGENCY	**$440,755**
CONTINGENCY (20%)	**$88,151**
TOTAL w/ CONTINGENCY	**$528,906**
TAX (9%)	**$47,602**
TOTAL w/ TAX	**$576,508**
PLANNING & DESIGN (16%)	**$92,241**
PERMIT (1%)	**$5,765**
ENVIRONMENTAL REVIEW (3%)	**$17,295**
TOTAL	**$691,809**

Project:	OVTS Facility Master Plan	Date:	1-Dec-20
Estimate Basis:	Planning Level, Order of Magnitude for Second Compactor	Costs:	2020 Dollars
Location:	Kitsap County, Washington	Prepared By:	I Sutton, Parametrix

DETAILED CAPITAL COST ESTIMATE

I. GENERAL

Item	Quantity	Units	Unit Price	Item Cost	Total
General Conditions Allowance	1	LS	LS	$10,000	
Construction Phasing Allowance	1	LS	LS	$5,000	
Work Setout and Survey	1	LS	LS	$2,000	
Mobilization/Demobilization	1	LS	LS	$10,000	
Trench Safety	1	LS	LS	$2,000	
Traffic Control	1	LS	LS	$2,000	
Overhead and Profit 12% of Direct Construction Cost Below	1	LS	LS	$380,000	
Subtotal I					**$411,000**

II. SITEWORK

Item	Quantity	Units	Unit Price	Item Cost	Total
Temporary Erosion and Sediment Control Measures	1	LS	LS	$1,000	
Saw Cut Pavement	1	LS	LS	$1,000	
Remove Asphalt Pavement	1	LS	LS	$2,000	
Remove Structures	1	LS	LS	$5,000	
Site Utilities					
Fiber Allowance	50	LF	$50.00	$2,500	
Electrical	50	LF	$90.00	$4,500	
Site Lighting					
Conduit and Cable	50	LF	$9.50	$475	
Concrete Base	1	EA	$380.00	$380	
Standard and Luminaire	1	EA	$3,000.00	$3,000	
Subtotal II					**$19,855**

III. Top Load Adaption

Item	Quantity	Units	Unit Price	Item Cost	Total
Compactor SSI 4500 SPH	1	LS	LS	$1,800,000	
Trolly Car	1	LS	LS	$300,000	
Top Load Adaption	1	LS	LS	$1,000,000	
Canopy	1200	SF	$40.00	$48,000	
Subtotal III					**$3,148,000**

TOTAL w/o CONTINGENCY	**$3,578,855**
CONTINGENCY (20%)	**$715,771**
TOTAL w/ CONTINGENCY	**$4,294,626**
TAX (9%)	**$386,516**
TOTAL w/ TAX	**$4,681,142**
PLANNING & DESIGN (10%)	**$468,114**
PERMIT (1%)	**$46,811**
ENVIRONMENTAL REVIEW (0%)	**$0**
TOTAL	**$5,196,068**

Project:	OVTS Facility Master Plan	Date:	1-Dec-20
Estimate Basis:	Planning Level, Order of Magnitude for Intermodal Yard Expansion	Costs:	2020 Dollars
Location:	Kitsap County, Washington	Prepared By:	I Sutton, Parametrix

DETAILED CAPITAL COST ESTIMATE

I. GENERAL

Item	Quantity	Units	Unit Price	Item Cost	Total
General Conditions Allowance	1	LS	LS	$10,000	
Construction Phasing Allowance	1	LS	LS	$5,000	
Work Setout and Survey	1	LS	LS	$2,000	
Mobilization/Demobilization	1	LS	LS	$5,000	
Trench Safety	1	LS	LS	$2,000	
Traffic Control	1	LS	LS	$2,000	
Overhead and Profit 12% of Direct Construction Cost Below	1	LS	LS	$40,000	
Subtotal I					**$66,000**

II. SITEWORK

Item	Quantity	Units	Unit Price	Item Cost	Total
Temporary Erosion and Sediment Control Measures	1	LS	LS	$5,000	
Saw Cut Pavement	160	LF	$4.00	$640	
Earthwork					
Clear and Grub	0.2	Acres	$15,000.00	$3,000	
Strip/Stockpile Topsoil	200	CY	$4.00	$800	
Common Excavation/Fill	600	CY	$8.00	$4,800	
Common Borrow	500	CY	$25.00	$12,500	
Finishing Grading	0.2	Acres	$8,000.00	$1,600	
Roadway and Sidewalk Concrete					
Concrete Curb and Gutter	50	LF	$15.00	$750	
Subgrade Preparation	950	SY	$2.00	$1,900	
Geotextile Separation Fabric for Pavements	400	SY	$3.00	$1,200	
Gravel Base (9" thick)	400	Tons	$30.00	$12,000	
Asphalt Pavement, Parking (5" thick new)	300	Tons	$90.00	$27,000	
Site Utilities					
Electrical	100	LF	$90.00	$9,000	
Site Drainage					
Collection system	1	LS	LS	$20,000	
Site Lighting					
Conduit and Cable	100	LF	$9.50	$950	
Concrete Base	2	EA	$380.00	$760	
Standard and Luminaire	2	EA	$3,000.00	$6,000	
Retaining Wall Footing and Wall Concrete	250	CY	$700.00	$175,000	
Retaining Wall Waterproofing and Drainage	2600	SF	$10.00	$26,000	
Retaining Wall Backfill	200	CY	$30.00	$6,000	
Subtotal II					**$317,400**

TOTAL w/o CONTINGENCY	**$383,400**
CONTINGENCY (20%)	**$76,680**
TOTAL w/ CONTINGENCY	**$460,080**
TAX (9%)	**$41,407**
TOTAL w/ TAX	**$501,487**
PLANNING & DESIGN (16%)	**$80,238**
PERMIT (1%)	**$5,015**
ENVIRONMENTAL REVIEW (3%)	**$15,045**
TOTAL	**$601,785**

Project:	OVTS Facility Master Plan	Date:	1-Dec-20
Estimate Basis:	Planning Level, Order of Magnitude for Transfer Building Expansion	Costs:	2020 Dollars
Location:	Kitsap County, Washington	Prepared By:	I Sutton, Parametrix

DETAILED CAPITAL COST ESTIMATE

I. GENERAL

Item	Quantity	Units	Unit Price	Item Cost	Total
General Conditions Allowance	1	LS	LS	$25,000	
Construction Phasing Allowance	1	LS	LS	$10,000	
Work Setout and Survey	1	LS	LS	$10,000	
Mobilization/Demobilization	1	LS	LS	$10,000	
Trench Safety	1	LS	LS	$10,000	
Traffic Control	1	LS	LS	$10,000	
Overhead and Profit 12% of Direct Construction Cost Below	1	LS	LS	$620,000	
Subtotal I					**$695,000**

II. SITEWORK

Item	Quantity	Units	Unit Price	Item Cost	Total
Temporary Erosion and Sediment Control Measures	1	LS	LS	$10,000	
Saw Cut Pavement	160	LF	$4.00	$640	
Remove Asphalt Pavement	2000	SY	$6.00	$12,000	
Remove Structures	1	LS	LS	$100,000	
Earthwork					
Common Excavation/Fill	1000	CY	$8.00	$8,000	
Common Borrow	1000	CY	$25.00	$25,000	
Finishing Grading	0.4	Acres	$8,000.00	$3,200	
Roadway and Sidewalk Concrete					
4" Reinforced	50	SY	$45.00	$2,250	
Concrete Curb and Gutter	100	LF	$15.00	$1,500	
Subgrade Preparation	2300	SY	$2.00	$4,600	
Geotextile Separation Fabric for Pavements	500	SY	$3.00	$1,500	
Gravel Base (9" thick)	200	Tons	$30.00	$6,000	
Asphalt Pavement, Parking (5" thick new)	100	Tons	$90.00	$9,000	
Site Utilities					
Water Supply	1	LS	LS	$20,000	
Sewer System	1	LS	LS	$20,000	
Fiber Allowance	200	LF	$50.00	$10,000	
Electrical	200	LF	$90.00	$18,000	
Site Drainage					
Collection system	1	LS	LS	$50,000	
Pavement Striping	1	LS	LS	$5,000	
Wheel Stops	15	EA	$75.00	$1,125	
Site Lighting					
Conduit and Cable	400	LF	$9.50	$3,800	
Concrete Base	4	EA	$380.00	$1,520	
Standard and Luminaire	4	EA	$3,000.00	$12,000	
CCTV System	2	EA	$2,000.00	$4,000	
Site Signage	10	EA	$300.00	$3,000	
Subtotal II					**$332,135**

III. Transfer Station Office

Item	Quantity	Units	Unit Price	Item Cost	Total
Building	2000	SF	$130.00	$260,000	
Subgrade Preparation	250	SY	$2.00	$500	
Gravel Base 12"	100	CY	$26.00	$2,600	
Concrete Slabwork	100	CY	$450.00	$45,000	
Concrete Building Footings & Foundation Walls	200	CY	$500.00	$100,000	
Miscellaneous Concrete	10	CY	$500.00	$5,000	
Bollards and Miscellaneous Metals	10000	LB	$4.00	$40,000	
Interior Finishes - General	2000	SF	$10.00	$20,000	
Special Interior Finishes	2000	SF	$25.00	$50,000	
Building Signage	10	LS	LS	$5,000	
Mechanical Allowance	1	LS	LS	$50,000	
Plumbimg Allowance	1	LS	LS	$20,000	
Electrical					
Electrical Distribution Equipment	1	LS	LS	$20,000	
Lighting	2000	SF	$7.50	$15,000	
Grounding System	1	LS	LS	$10,000	
Power Distribution	2000	SF	$3.00	$6,000	
Signal, Alarm and Communications	2000	SF	$2.00	$4,000	
CCTV System	4	EA	$2,000.00	$8,000	
Subtotal III					**$661,100**

IV. Transfer Station Expansion

Item	Quantity	Units	Unit Price	Item Cost	Total
New Metal Building	17000	SF	$200.00	$3,400,000	
Gravel Base 12"	650	CY	$26.00	$16,900	
Concrete Slabwork	650	CY	$450.00	$292,500	
Concrete Building Footings & Foundation Walls	500	CY	$500.00	$250,000	
Miscellaneous Concrete	20	CY	$500.00	$10,000	
Bollards and Miscellaneous Metals	20000	LB	$4.00	$80,000	
Guardrails (Galv)	400	LF	$60.00	$24,000	
Building Signage	10	LS	LS	$5,000	
Mechanical	1	LS	LS	$50,000	
Plumbing	1	LS	LS	$20,000	
Electrical	1	LS	LS	$50,000	
Subtotal IV					**$4,198,400**

TOTAL w/o CONTINGENCY		**$5,886,635**
CONTINGENCY (20%)		**$1,177,327**
TOTAL w/ CONTINGENCY		**$7,063,962**
TAX (9%)		**$635,757**
TOTAL w/ TAX		**$7,699,719**
PLANNING & DESIGN (16%)		**$1,231,955**
PERMIT (1%)		**$76,997**
ENVIRONMENTAL REVIEW (3%)		**$230,992**
	TOTAL	**$9,239,662**

Project:	OVTS Facility Master Plan	Date:	1-Dec-20
Estimate Basis:	Planning Level, Order of Magnitude for Self-Haul Expansion	Costs:	2020 Dollars
Location:	Kitsap County, Washington	Prepared By:	I Sutton, Parametrix

DETAILED CAPITAL COST ESTIMATE

I. GENERAL

Item	Quantity	Units	Unit Price	Item Cost	Total
General Conditions Allowance	1	LS	LS	$25,000	
Construction Phasing Allowance	1	LS	LS	$10,000	
Work Setout and Survey	1	LS	LS	$10,000	
Mobilization/Demobilization	1	LS	LS	$10,000	
Trench Safety	1	LS	LS	$10,000	
Traffic Control	1	LS	LS	$10,000	
Overhead and Profit 12% of Direct Construction Cost Below	1	LS	LS	$260,000	
Subtotal I					**$335,000**

II. SITEWORK

Item	Quantity	Units	Unit Price	Item Cost	Total
Temporary Erosion and Sediment Control Measures	1	LS	LS	$10,000	
Saw Cut Pavement	350	LF	$4.00	$1,400	
Remove Asphalt Pavement	500	SY	$6.00	$3,000	
Remove Structures	1	LS	LS	$100,000	
Earthwork					
Common Excavation/Fill	200	CY	$8.00	$1,600	
Common Borrow	200	CY	$25.00	$5,000	
Finishing Grading	0.1	Acres	$8,000.00	$800	
Roadway and Sidewalk Concrete					
4" Reinforced	50	SY	$45.00	$2,250	
Concrete Curb and Gutter	100	LF	$15.00	$1,500	
Subgrade Preparation	900	SY	$2.00	$1,800	
Geotextile Separation Fabric for Pavements	200	SY	$3.00	$600	
Gravel Base (9" thick)	200	Tons	$30.00	$6,000	
Asphalt Pavement, Parking (5" thick new)	100	Tons	$90.00	$9,000	
Site Utilities					
Water Supply	1	LS	LS	$20,000	
Sewer System	1	LS	LS	$70,000	
Fiber Allowance	100	LF	$50.00	$5,000	
Electrical	100	LF	$90.00	$9,000	
Site Drainage					
Collection system	1	LS	LS	$50,000	
Pavement Striping	1	LS	LS	$5,000	
Wheel Stops	15	EA	$75.00	$1,125	
Site Lighting					
Conduit and Cable	400	LF	$9.50	$3,800	
Concrete Base	4	EA	$380.00	$1,520	
Standard and Luminaire	4	EA	$3,000.00	$12,000	
CCTV System	2	EA	$2,000.00	$4,000	
Site Signage	10	EA	$300.00	$3,000	
Subtotal II					**$327,395**

III. Transfer Station Office

Item	Quantity	Units	Unit Price	Item Cost	Total
Building	2000	SF	$130.00	$260,000	
Subgrade Preparation	250	SY	$2.00	$500	
Gravel Base 12"	100	CY	$26.00	$2,600	
Concrete Slabwork	100	CY	$450.00	$45,000	
Concrete Building Footings & Foundation Walls	200	CY	$500.00	$100,000	
Miscellaneous Concrete	10	CY	$500.00	$5,000	
Bollards and Miscellaneous Metals	10000	LB	$4.00	$40,000	
Interior Finishes - General	2000	SF	$10.00	$20,000	
Special Interior Finishes	2000	SF	$25.00	$50,000	
Building Signage	10	LS	LS	$5,000	
Mechanical Allowance	1	LS	LS	$50,000	
Plumbimg Allowance	1	LS	LS	$20,000	
Electrical					
Electrical Distribution Equipment	1	LS	LS	$20,000	
Lighting	2000	SF	$7.50	$15,000	
Grounding System	1	LS	LS	$10,000	
Power Distribution	2000	SF	$3.00	$6,000	
Signal, Alarm and Communications	2000	SF	$2.00	$4,000	
CCTV System	4	EA	$2,000.00	$8,000	
Subtotal III					**$661,100**

IV. Transfer Station Expansion

Item	Quantity	Units	Unit Price	Item Cost	Total
New Metal Building	4300	SF	$200.00	$860,000	
Gravel Base 12"	150	CY	$26.00	$3,900	
Concrete Slabwork	150	CY	$450.00	$67,500	
Concrete Building Footings & Foundation Walls	100	CY	$500.00	$50,000	
Miscellaneous Concrete	10	CY	$500.00	$5,000	
Bollards and Miscellaneous Metals	10000	LB	$4.00	$40,000	
Guardrails (Galv)	100	LF	$60.00	$6,000	
Doors					
Coiling Overhead Metal Door	8	EA	$12,000.00	$96,000	
Building Signage	10	LS	LS	$5,000	
Mechanical	1	LS	LS	$15,000	
Plumbing	1	LS	LS	$10,000	

Electrical	1	LS	LS	$15,000	
Subtotal IV					**$1,173,400**

TOTAL w/o CONTINGENCY		**$2,496,895**
CONTINGENCY (20%)		**$499,379**
TOTAL w/ CONTINGENCY		**$2,996,274**
TAX (9%)		**$269,665**
TOTAL w/ TAX		**$3,265,939**
PLANNING & DESIGN (16%)		**$522,550**
PERMIT (1%)		**$32,659**
ENVIRONMENTAL REVIEW (3%)		**$97,978**
	TOTAL	**$3,919,126**

Project:	OVTS Facility Master Plan	Date:	1-Dec-20
Estimate Basis:	Planning Level, Order of Magnitude for Remote Self-Haul	Costs:	2020 Dollars
Location:	Kitsap County, Washington	Prepared By:	I Sutton, Parametrix

DETAILED CAPITAL COST ESTIMATE

I. GENERAL

Item	Quantity	Units	Unit Price	Item Cost	Total
General Conditions Allowance	1	LS	LS	$10,000	
Construction Phasing Allowance	1	LS	LS	$5,000	
Work Setout and Survey	1	LS	LS	$2,000	
Mobilization/Demobilization	1	LS	LS	$5,000	
Trench Safety	1	LS	LS	$2,000	
Traffic Control	1	LS	LS	$2,000	
Overhead and Profit 12% of Direct Construction Cost Below	1	LS	LS	$90,000	
Subtotal I					**$116,000**

II. SITEWORK

Item	Quantity	Units	Unit Price	Item Cost	Total
Temporary Erosion and Sediment Control Measures	1	LS	LS	$5,000	
Saw Cut Pavement	600	LF	$4.00	$2,400	
Earthwork					
Clear and Grub	1.5	Acres	$15,000.00	$22,500	
Strip/Stockpile Topsoil	200	CY	$4.00	$800	
Common Excavation/Fill	1000	CY	$8.00	$8,000	
Common Borrow	500	CY	$25.00	$12,500	
Finishing Grading	0.75	Acres	$8,000.00	$6,000	
Subgrade Preparation	3500	SY	$2.00	$7,000	
Geotextile Separation Fabric for Pavements	400	SY	$3.00	$1,200	
Gravel Base (9" thick)	1600	Tons	$30.00	$48,000	
Asphalt Pavement, Parking (5" thick new)	900	Tons	$90.00	$81,000	
Site Utilities					
Water Supply	1	LS	LS	$20,000	
Fiber Allowance	300	LF	$50.00	$15,000	
Electrical	300	LF	$90.00	$27,000	
Site Drainage					
Collection system	1	LS	LS	$20,000	
Fencing and Gates					
6 Foot chainlink vinyl coated w/ 2 Personnel Gates	1000	LF	$18.00	$18,000	
Site Lighting					
Conduit and Cable	300	LF	$9.50	$2,850	
Concrete Base	2	EA	$380.00	$760	
Standard and Luminaire	2	EA	$3,000.00	$6,000	
Subtotal II					**$304,010**

III. REFUSE SHEDS

Item	Quantity	Units	Unit Price	Item Cost	Total
New Metal Buildings	3000	SF	$40.00	$120,000	
Subgrade Preparation	300	SY	$2.00	$600	
Gravel Base 12"	100	CY	$26.00	$2,600	
Backfill	40	CY	$26.00	$1,040	
Concrete Slabwork	100	CY	$450.00	$45,000	
Concrete Building Footings & Foundation Walls	200	CY	$500.00	$100,000	
Miscellaneous Concrete	20	CY	$500.00	$10,000	
Bollards and Miscellaneous Metals	20000	LB	$4.00	$80,000	
Guardrails (Galv)	300	LF	$60.00	$18,000	
Building Signage	1	LS	LS	$5,000	
Electrical					
Electrical Distribution Equipment	1	LS	LS	$5,000	
Lighting	3000	SF	$7.50	$22,500	
Grounding System	1	LS	LS	$10,000	
Power Distribution	3000	SF	$3.00	$9,000	
Signal, Alarm and Communications	3000	SF	$2.00	$6,000	
CCTV System	4	EA	$2,000.00	$8,000	
Subtotal III					**$442,740**

TOTAL w/o CONTINGENCY	**$862,750**
CONTINGENCY (20%)	**$172,550**
TOTAL w/ CONTINGENCY	**$1,035,300**
TAX (9%)	**$93,177**
TOTAL w/ TAX	**$1,128,477**
PLANNING & DESIGN (16%)	**$180,556**
PERMIT (1%)	**$11,285**
ENVIRONMENTAL REVIEW (3%)	**$33,854**
TOTAL	**$1,354,172**